BOSERL

专注减速机电机 研发 制造

您设备的速度，BOSERL可以满足

F

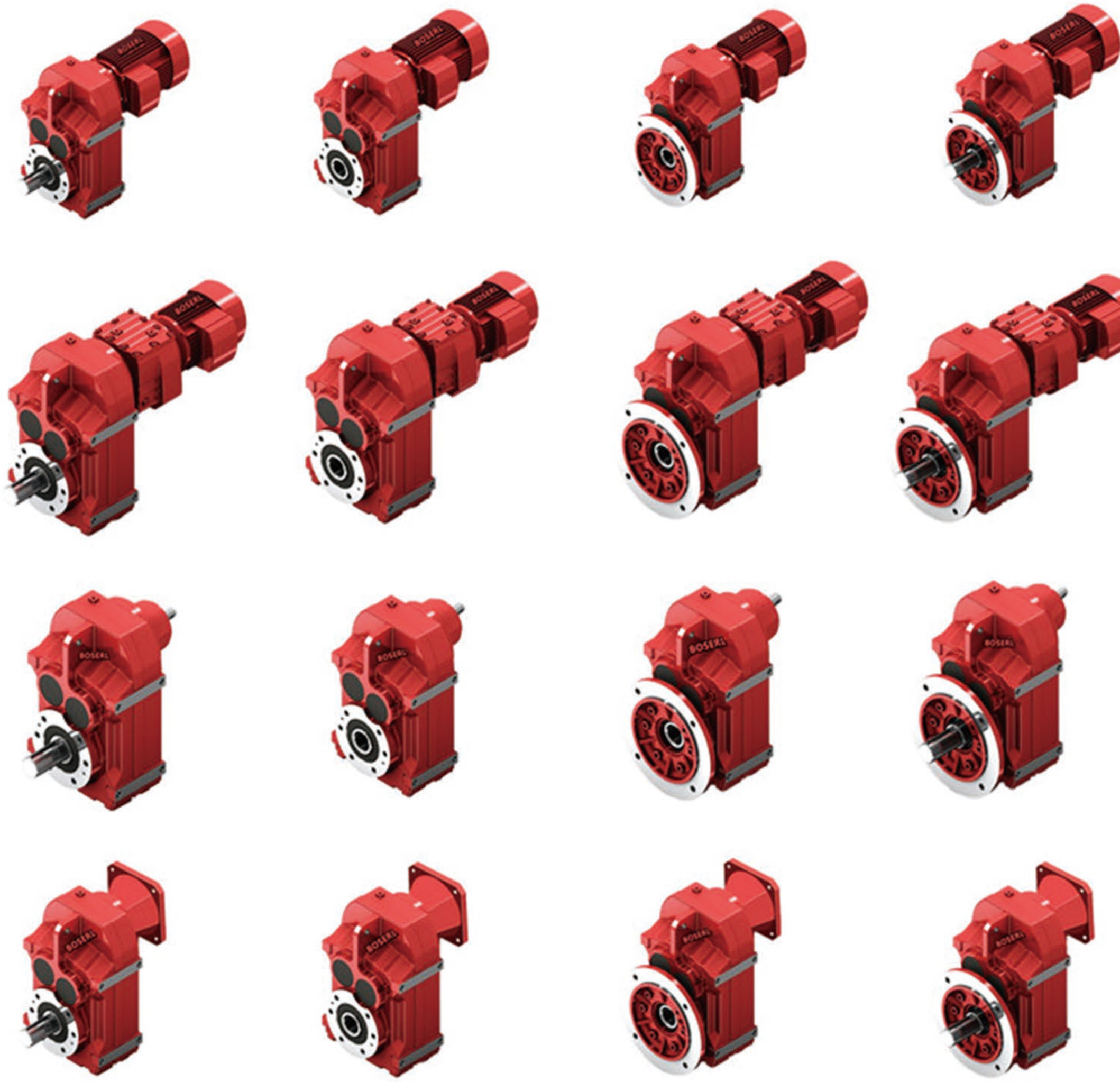

FA

FAF

FF

2021

广东伯仕传动科技有限公司

Guangdong Boserl Transmission Technology Co.,Ltd

德国BOSERL减速机成立于2010年，专注于减速机电机设备研发、制造，目前已经和多个国内外大型企业建立技术合作共享关系。

通过建立以品质为核心的技术链生态，以市场需求和企业自身转型升级为动力，BOSERL已迅速成长为国内外减速机电机设备行业的领头羊，成为减速机电机设备行业的深耕版"新SEW"

我公司的主要产品有：R/F/K/S四大系列齿轮减速机、蜗轮蜗杆减速机、标准工业齿轮箱、小型减速电机，功率覆盖5W-9550KW的标准系列。

以全新的“模块组合”概念，为机电电子一体化的发展提供了更加广阔的空间，应用于各种机械设备中，包括钢铁、冶金、水泥、矿山、基建、建材、环保、造纸、港口、机场、高铁、地铁、石化、轻工、电镀、变位机、卷扬机、舞台机械、食品饮料及仓储物流等等。在国家重点工程项目中减速机的产品有着广泛的应用，如国内各主要港口、 首都机场及国内各大机场、首都剧场、北京人民大会堂大、小礼堂改造工程、 天津夏利、长春一汽、上海通用、大众、上海磁悬浮列车工程, 各大污水处理项目以及著名的中华世纪坛、三峡水利工程等等。

多年来，公司不断引进德国新设备如：Niles成形磨齿机、新工艺，采用CAD / CAM / CAI技术，逐步健全了生产、安装、售后服务，质量保证模式，严格按照ISO - 9001 - 2000质量体系要素运做，，确保生产高品质、高规格的产品。

公司团队均已在机电行业从业达到10年以上专业人才组成，团队专注为客户解决传动上所有难题，以多样式方案为客户提供技术支持，提高客户生产效率，降低企业成本，减少客户不必要的浪费及损失，BOSERL已为十几万家企业提供产品解决方案，做到全心全意为客户着想，用价廉物美的产品提供最优质的服务。

实现价值最大化是每个企业的最核心需求。我们发现这个需求并未很好地得到满足，创立BOSERL就是为了实现这个朴素的愿望，帮助更多企业以更便捷、更高效地完成价值最大化，在行业的竞争中处于更加有利的位置,让世界因我们的付出而更加精彩，实现企业价值最大化。

这就是BOSEL！您设备的速度，BOSERL可以满足！

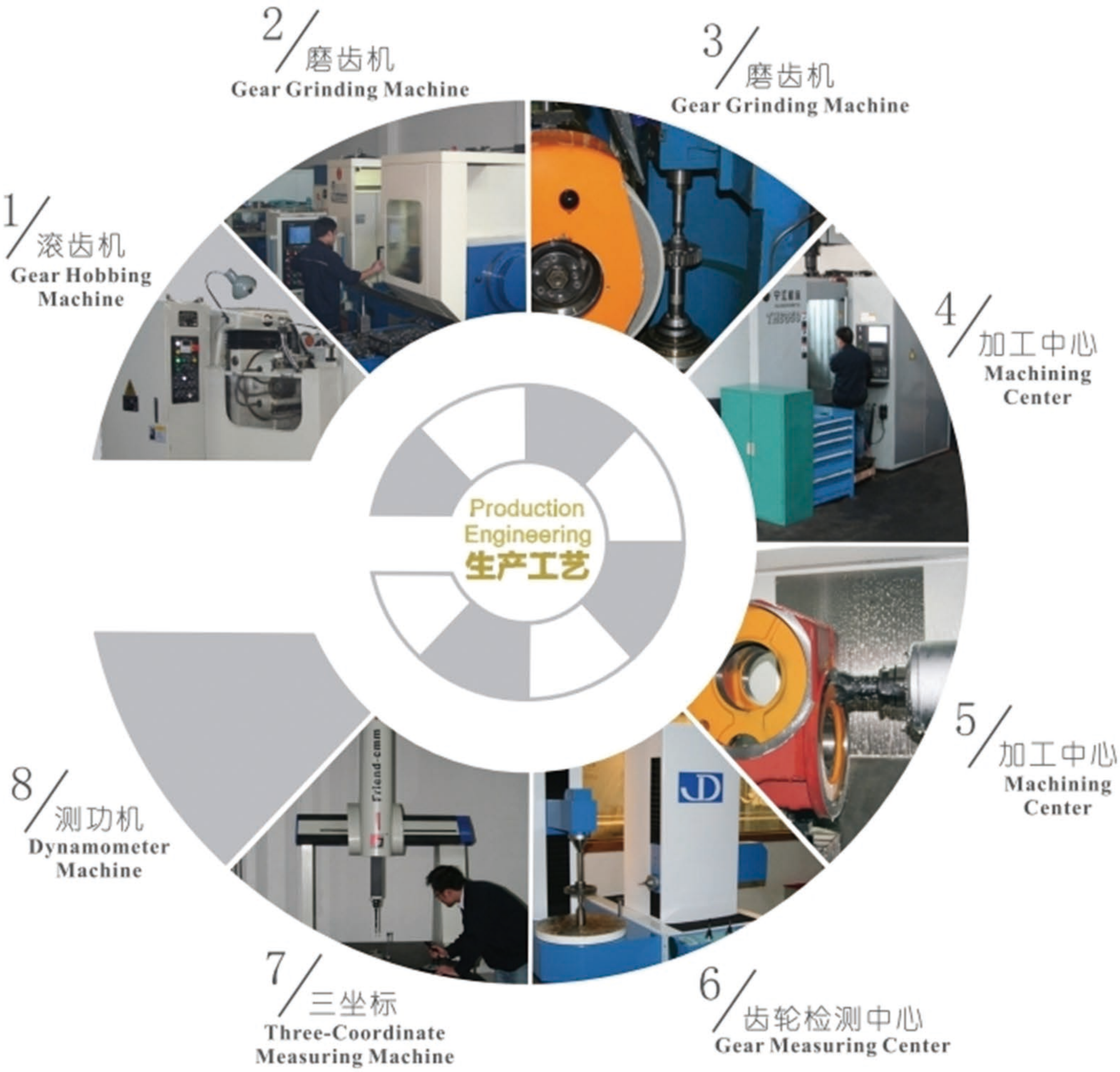
2/磨齿机
Gear Grinding Machine
3/磨齿机
Gear Grinding Machine
1/滚齿机
Gear Hobbing Machine
4/加工中心
Machining Center
Production Engineering
生产工艺
5/加工中心
Machining Center
8/测功机
Dynamometer Machine
7/三坐标
Three-Coordinate Measuring Machine
6/齿轮检测中心
Gear Measuring Center

1.5 选型表注释 / Selection Table Explanation

性能参数表结构说明 /Performance Parameter Table Structure

P_1 [kW]	n_2 [1/min]	M_2 [Nm]	i	Fr [N]	K	Frame size	Input Configuration

- P_1 [kW] → 电机功率 Power of motor
- n_2 [1/min] → 输出转速 Output speed
- M_2 [Nm] → 输出扭矩 Output torque
- i → 减速比 Ratio
- Fr [N] → 径向载荷 Permitted Overhung load Output side
- K → 服务系数 Service factor
- Frame size → 机座规格 Frame size
- Input Configuration → 输入配置 Input Configuration

性能参数表结构说明 / Performance Parameter Table Structure

M_{2max} [Nm]	n_2 [1/min]	i	Fr [N]	Frame size	Motor

- M_{2max} [Nm] → 极限输出扭矩 Max. Permitted Output torque
- n_2 [1/min] → 输出转速 Output speed
- i → 减速比 Ratio
- Fr [N] → 径向载荷 Permitted Overhung load Output side
- Frame size → 机座规格 Frame size
- Motor → 电机型号 Motor type

功率配置表结构说明 /Power Combination

n_2 [1/min]	M_{2max} [Nm]	Fr [N]	i	功率 Power	功率 Power	功率 Power	功率 Power	功率 Power	功率 Power

- n_2 [1/min] → 输出转速 Output speed
- M_{2max} [Nm] → 极限输出扭矩 Max. Permitted Output torque
- Fr [N] → 径向载荷 Permitted Overhung load Output side
- i → 减速比 Ratio

1.6. 润滑油 / Lubrication

1.6.1 润滑油类型 / Types of Lubrication

	环境温度(℃) Ambient Temperature(℃)	ISO粘度 ISO Viscosity Class	SHELL	Mobil MOBIL	bp BP	润滑油类型 Lubrication Type
GR GF GK GS	-40 ~ +10	VG 220	Shell Omala 200	Mobilgear 630	BP Energol GR-XP 220	矿物油 Mineral Oil
	-20 ~ +25	VG 150 VG 100	Shell Omala 100	Mobilgear 627	BP Energol GR-XP 100	
	-30 ~ +10	VG68-46 VG 32	Shell Tellus 32	Mobil D.T.E 13M		
	-40 ~ -20	VG 22 VG 15	Shell Tellus 32	Mobil D.T.E 11M	BP Energol HLP-HM 15	
	-40 ~ +80	VG 220	Shell Tellus 32	Mobil SHC 630		合成油 Synthetic Oil
	-40 ~ +10	VG 32		Mobil SHC 624		

1.6.2 润滑油量表

规定的加注量为参考值。精确值的变化与级数和传动比有关。请您在加注润滑油时一定要注意油位螺栓所指示的精确油量。后期调整安装方式时，您必须根据改变后的安装方式相应调整加注润滑剂。下表中列出了安装方式M1-M6的减速器相应的标准参考润滑油注入量值。

1.6.2 Lubricant Fill Quantity

The specified fill quantities are recommended values. The precise value varies depending on the number of stages and gear ratio. When filling, it is essential to check the oil level plug since it indicates the precise oil capacity. The following tables show guide values For lubricant fill quantities in relation to the mounting position M1 -M6.

GF..,GFA..B,GFH..B,GFV..B

减速器型号 Gear units	加注量 Fill quantity in liters 单位:升(L) Unit: L					
	M1	M2	M3	M4	M5	M6
GF..27	0.60	0.80	0.65	0.70	0.60	0.60
GF..37	0.95	1.25	0.70	1.25	1.00	1.10
GF..47	1.50	1.80	1.10	1.90	1.50	1.70
GF..57	2.60	3.50	2.10	3.50	2.80	2.90
GF..67	2.70	3.80	1.90	3.80	2.90	3.20
GF..77	5.90	7.30	4.30	8.00	6.00	6.30
GF..87	10.8	13.0	7.70	13.8	10.8	11.0
GF..97	18.5	22.5	12.6	25.2	18.5	20.0
GF..107	24.5	32.0	19.5	37.5	27.0	27.0
GF..127	40.5	55.0	34.0	61.0	46.3	47.0
GF..157	69.0	104	63.0	105	86.0	78.0

GFF..

减速器型号 Gear units	加注量 Fill quantity in liters 单位:升(L) Unit: L					
	M1	M2	M3	M4	M5	M6
GFF27	0.60	0.80	0.65	0.70	0.60	0.60
GFF37	1.00	1.25	0.70	1.30	1.00	1.10
GFF47	1.60	1.85	1.10	1.90	1.50	1.70
GFF57	2.80	3.50	2.10	3.70	2.90	3.00
GFF67	2.70	3.80	1.90	3.80	2.90	3.20
GFF77	5.90	7.30	4.30	8.10	6.00	6.30
GFF87	10.8	13.2	7.80	14.1	11.0	11.2
GFF97	19.0	22.5	12.6	25.5	18.9	20.5
GFF107	25.5	32.0	19.5	38.5	27.5	28.0
GFF127	41.5	55.5	34.0	63.0	46.5	49.0
GFF157	72.0	105	64.0	106	87.0	79.0

GFA..,GFH..,GFV..,GFAF..,GFHF..,GFVF..,GFAZ..,GFHZ..,GFVZ..

减速器型号 Gear units	加注量 Fill quantity in liters 单位:升(L) Unit: L					
	M1	M2	M3	M4	M5	M6
GF..27	0.60	0.80	0.65	0.70	0.60	0.60
GF..37	0.95	1.25	0.70	1.25	1.00	1.10
GF..47	1.50	1.80	1.10	1.90	1.50	1.70
GF..57	2.70	3.50	2.10	3.40	2.90	3.00
GF..67	2.70	3.80	1.90	3.80	2.90	3.20
GF..77	5.90	7.30	4.30	8.00	6.00	6.30
GF..87	10.8	13.0	7.70	13.8	10.8	11.0
GF..97	18.5	22.5	12.6	25.2	18.5	20.0
GF..107	24.5	32.0	19.5	37.5	27.0	27.0
GF..127	39.0	54.5	34.0	61.0	45.0	46.5
GF..157	68.0	103	62.0	104	85.0	79.5

3.1 部件分解图 / Spare Parts List

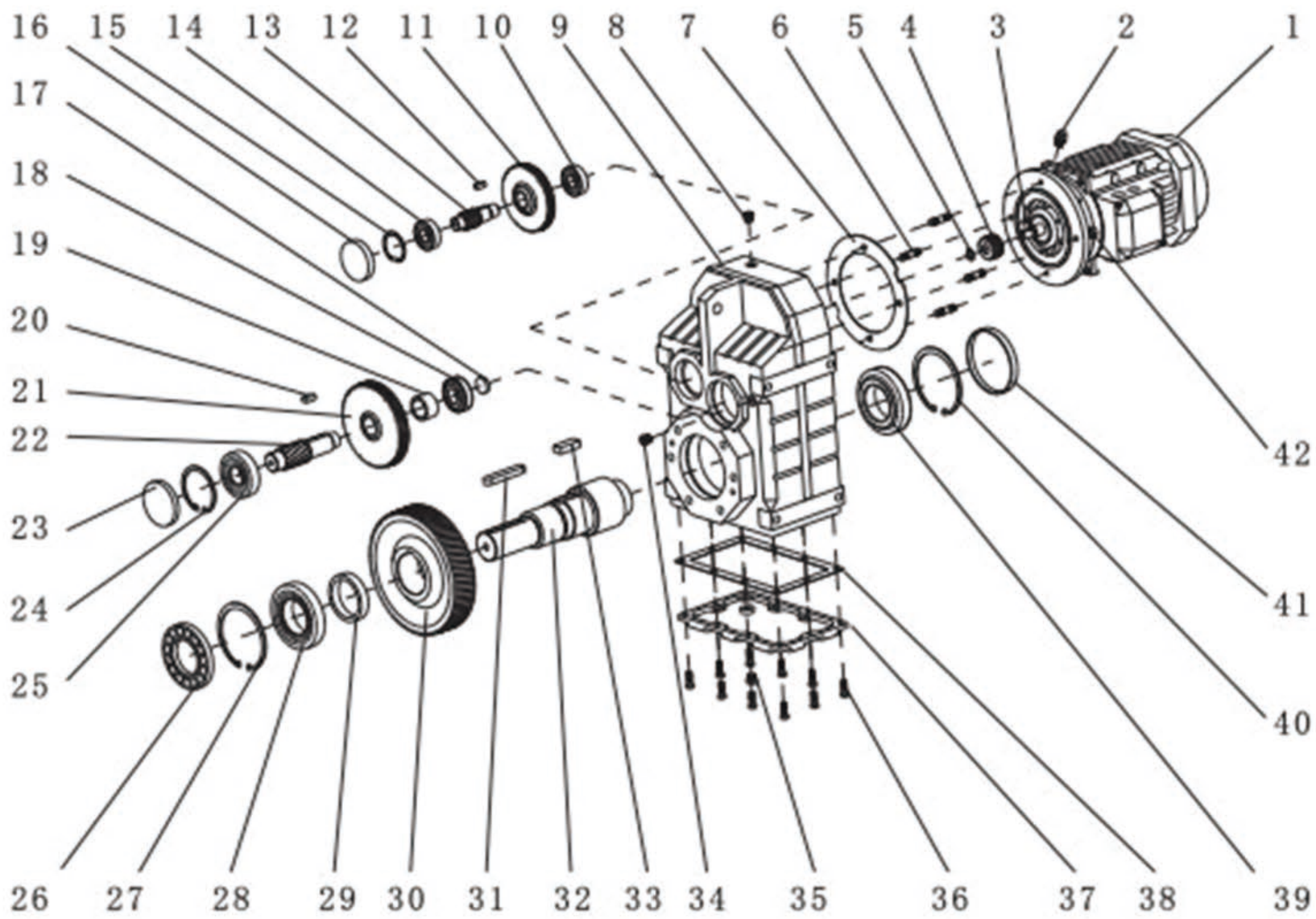

1 电机/motor
2 透气阀/breather valve
3 平键/flat key
4 齿轮/gear
5 轴用挡圈/retaining rings for shafts
6 双头螺栓/stud
7 纸垫/gasket
8 油塞/oil level plug
9 箱体/housing
10 轴承/bearing
11 齿轮/gear
12 平键/flat key
13 齿轮轴/gear shaft
14 轴承/bearing
15 孔用挡圈/retaining rings for bores
16 平面油封/plane seal
17 平面油封/plane seal
18 轴承/bearing
19 轴套/spacer tube
20 平键/flat key
21 齿轮/gear
22 齿轮轴/gear shaft
23 平面油封/plane seal
24 孔用挡圈/retaining rings for bores
25 轴承/bearing
26 骨架油封/skeleton oil seal
27 孔用挡圈/retaining rings for bores
28 轴承/bearing
29 轴套/spacer tube
30 齿轮/gear
31 平键/flat key
32 输出轴/output shaft
33 平键/flat key
34 油塞/oil level plug
35 油塞/oil level plug
36 外六角螺钉/hex head screw
37 盖板/cover plate
38 纸垫/gasket
39 轴承/bearing
40 孔用挡圈/ retaining rings for bores
41 平面油封/plane seal
42 六角螺母/hexagon nut

3.2 机型版本 / Versions

3.2.1 基本型式 / Basic Versions

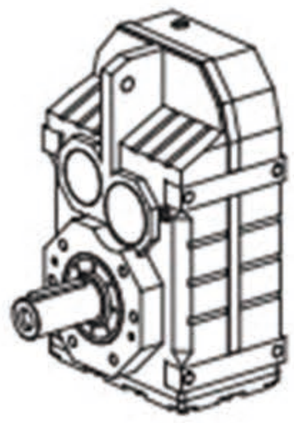	**GF..** 底脚安装平行轴 - 斜齿轮减速机 Foot-mounted parallel shaft helical geared units.
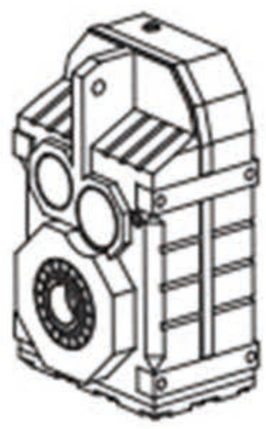	**GFA..B** 底脚空心轴安装平行轴 - 斜齿轮减速机 Foot-mounted parallel shaft helical geared units. **GFV..B** 底脚花键空心轴（DIN5480）安装平行轴 - 斜齿轮减速机 Foot-mounted parallel shaft helical geared motor with splined hollow shaft to DIN5480.
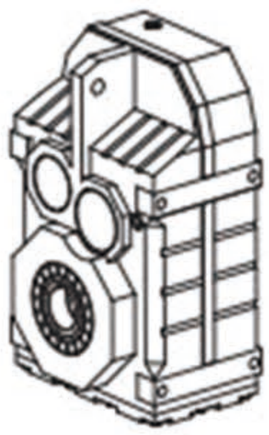	**GFA..** 空心轴安装平行轴 - 斜齿轮减速机 Parallel shaft helical geared units with hollow shaft. **GFV..** 花键空心轴（DIN5480）安装平行轴 - 斜齿轮减速机 Parallel shaft helical geared units with splined hollow shaft to DIN5480.
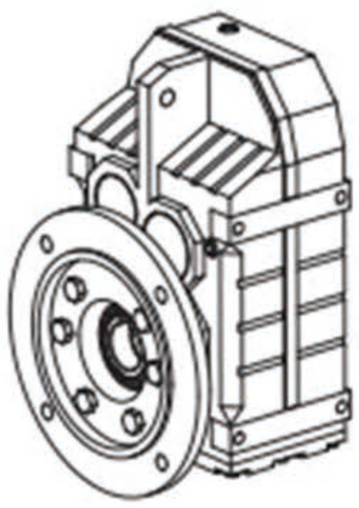	**GFAF..** B5法兰空心轴安装平行轴 - 斜齿轮减速机 Parallel shaft helical geared units in B5 flangemounted version with hollow shaft. **GFVF..** B5法兰花键空心轴（DIN5480）安装平行轴 - 斜齿轮减速机 Paeallel shaft helical geared units in B5 flange-mounted version with splined hollow shaft to DIN5480.
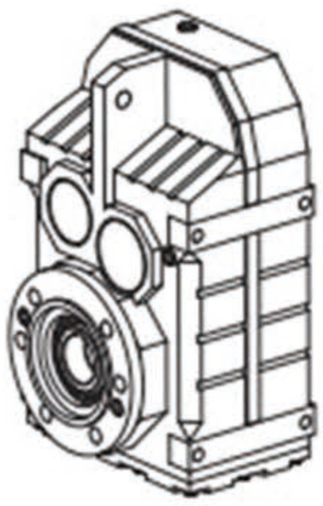	**GFAZ..** B14法兰空心轴安装平行轴 - 斜齿轮减速机 Parallel shaft helical geared units in B14 flange-mounted version with hollow shaft. **GFVZ..** B14法兰花键空心轴（DIN5480）安装平行轴 斜齿轮减速机 Parallel sfaft helical geared units in B14 flange-mounted wersion with splined hollow shaft to DIN5480.

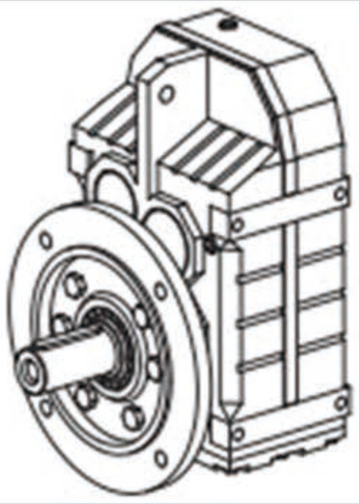	**GFF..** B5法兰安装平行轴-斜齿轮减速机 Parallel shaft helical geared units in B5 flange-mounted version.
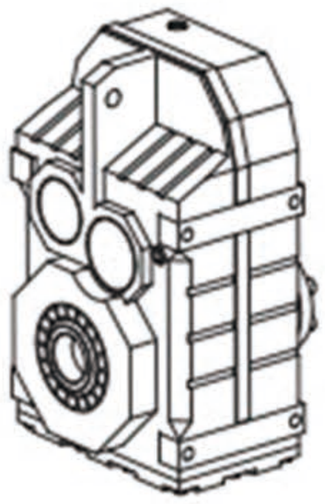	**GFH..B** 底脚空心轴锁紧盘安装平行轴-斜齿轮减速机 Foot-mounted parallel shaft helical geared units with hollow shaft and shrink disk.
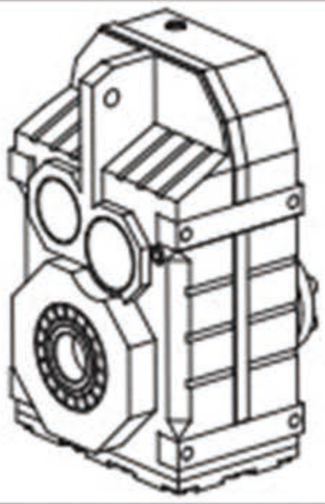	**GFH..** 空心轴锁紧盘安装平行轴-斜齿轮减速机 Parallel shaft helical geared units with hollow shaft and shrink disk.
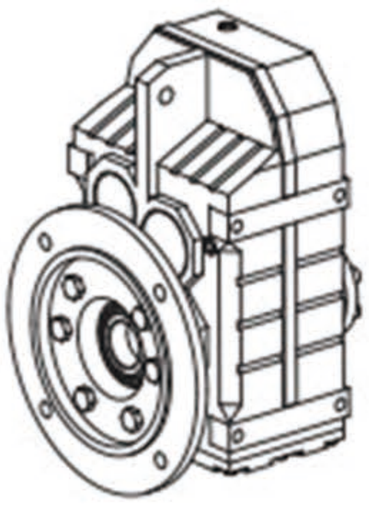	**GFHF..** B5法兰空心轴锁紧盘安装平行轴-斜齿轮减速机 Parallel shaft helical geared units in B5 flange-mounted version with hollow shaft and shrink disk.
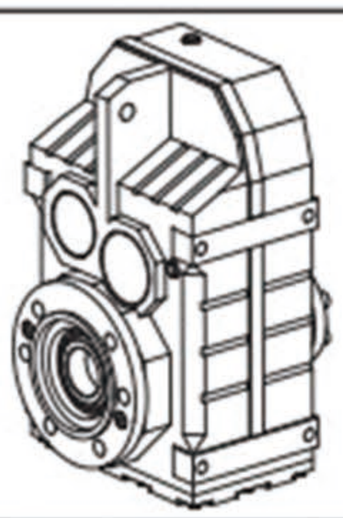	**GFHZ..** B14法兰空心轴锁紧盘安装平行轴-斜齿轮减速机 Parallel shaft helical geared units in B14 flange-mounted with hollow shaft and shrink disk.

3.2.2 输入型式 / Input Versions

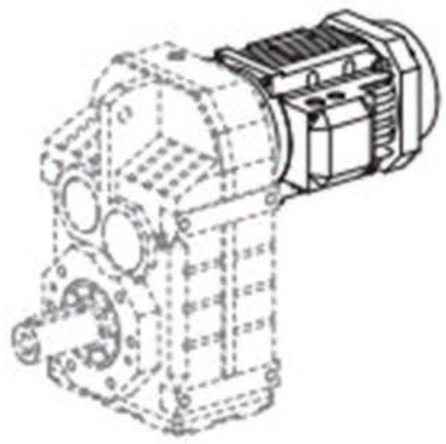	**GF.. Y..** 直联电机输入 Input with geared motors.
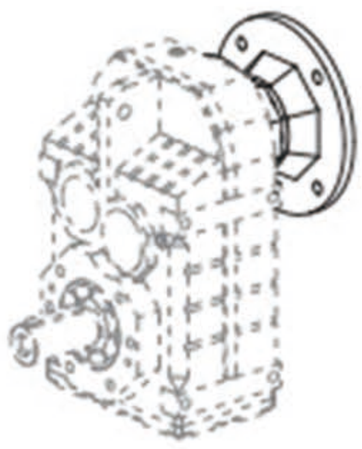	**GF.. AM..** AM（IEC）法兰输入 Input with AM adapters for mounting IEC motors.
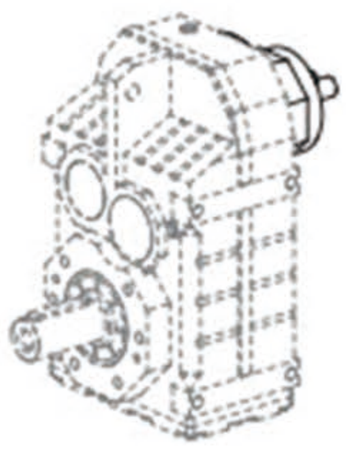	**GF.. AD..** AD 轴输入 Input with AD shaft assembly.

3.2.3 **GF..与 GRF..组合** / GF.. and GRF.. Combination

当需要特别低速输出时，可选择 GRF 齿轮箱作为 GF 齿轮箱的输入。

If special low speed is needed, GRF.. gearbox can be the input of GF.. Gearbox.

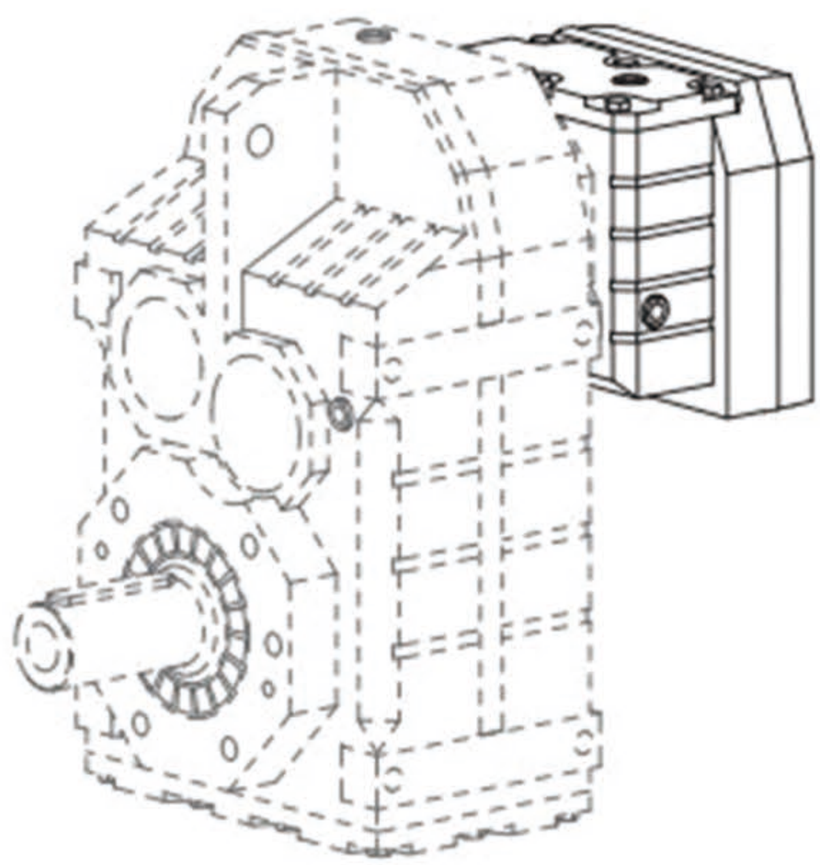

3.3 产品标注 / Product Code

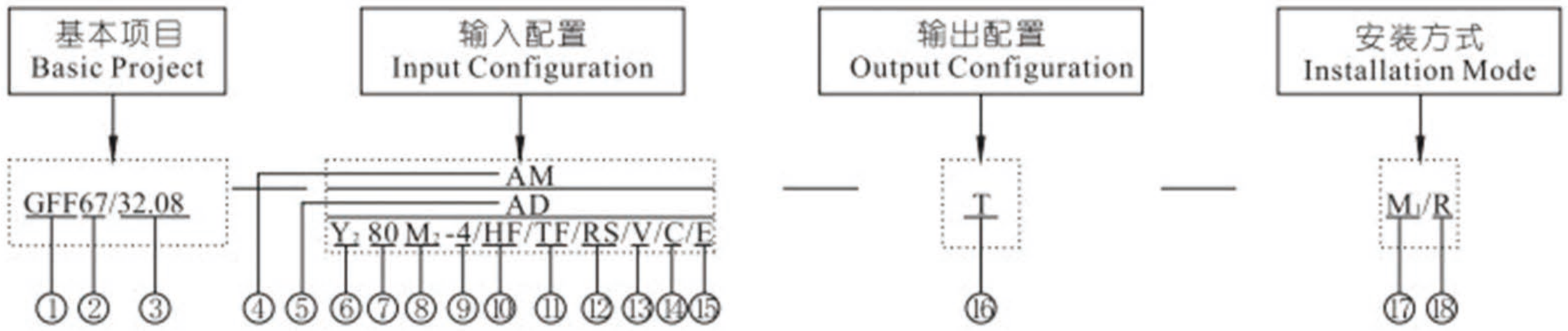

	标号 NO.	含义 Meaning	说明 Explanation
基本项目 Basic Project	①	系列代号 Series Code	GF、GFF、GFA...(详见3.2.1) GF,GFF,GFA...(see 3.2.1).
	②	机座号 Frame Size	机座号: 37、47、57... Frame Size: 37, 47, 57...
	③	传动比 Transmission Ratio	传动比 i Transmission Ratio I.
输入配置 Input Configuration	④	法兰输入代号 Flange Input Code	AM(IEC): 63、71、80...
	⑤	轴输入代号 Shaft Input Code	AD: 1、2、3...
	⑥	电机代号 Motor Code	Y_2: 三相异步电动机 Y_2: Three Phase Asynchronous Motor. YD: 变极多速三相异步电动机 YD: Variable-pole Multi-speed Three Phase Asynchronous Motor. YS: 小功率三相异步电动机 YS: Small Power Three Phase Asynchronous Motor. YVF_2: 变频调速三相异步电动机 YVF_2: Variable Frequency Speed Control Three Phase Asynchronous Motor. Y_2EJ: 电磁制动三相异步电动机 Y_2EJ: Electromagnetic Brake Three Phase Asynchronous Motor. YB2: 隔爆三相异步电动机 YB2: Flame Proof Three Phase Asynchronous Motor.
	⑦	电机机座号 Motor Frame Size.	63、71、80...
	⑧	电机定子铁芯长度代号 Length Code of Stator Core.	M、M_1、M_2、S、S_1、S_2、L、L_1、L_2
	⑨	电机极数 Pole Number of Motor.	2、4、6、8

	标号 NO.	含义 Meaning	说明 Explanation
输入配置 Input Configuration	⑩	手动释放装置 Manual Release Device	无 代 码: 无手动释放装置 No Code: No manual release device. H F: 手动释放装置带自锁功能 H F: Manual release device with self-locking Fun-Ction. H R: 手动释放装置不带自锁功能 H R: Manual release device without self-Locking function.
	⑪	电机热保护装置 Motor Heat-protection Device.	无 代 码: 无电机热保护装置 No Code: No motor heat-protection device. T F: 电机热保护装置 T F: Motor heat-protection device.
	⑫	逆止器 Backstop	无 代 码: 无逆止器 No Code: No backstop. R S: 逆止器 R S: Backstop.
	⑬	强制冷却风扇 Forced Cooling Fan	无 代 码: 无强制冷却风扇 No Code: no forced cooling fan. V: 强制冷却风扇 V: Forced cooling fan.
	⑭	防雨罩 Cover	无 代 码: 无风扇防护罩 No Code: No fan cover. C: 防雨罩 C: cover.
	⑮	编码器 Encoder	无 代 码 : 无编码器 No Code: No encoder. E: 编码器 E: Encoder
输出配置 Output Configuration	⑯	扭力臂 Torque Arm	无 代 码: 无扭力臂 No Code: No torque arm. T: 扭力臂 T: Torque Arm.
安装方式 Mounting Positions	⑰	安装方位 Mounting Position	M1、M2、M3、M4、M5、M6
	⑱	电机接线盒方位 Position for motor terminal box.	R、B、L、T

说明:

1. 基本项目不可省略;
2. 输入配置中，只能在 AM、AD 和电机之间选择一种;
3. 安装方式参数若省略，默认按 M1 安装方位，R 接线盒方位提供。

Notes:

1. Basic project can not be omitted.
2. Input configuration can only be one of AM, AD and motor.
3. If not mounting position, default mounting position will be M1, default position for motor terminal will be R.

3.4 安装方位 / Mounting Positions

3.4.1 电机接线盒方位 / Position of Motor Terminal Box

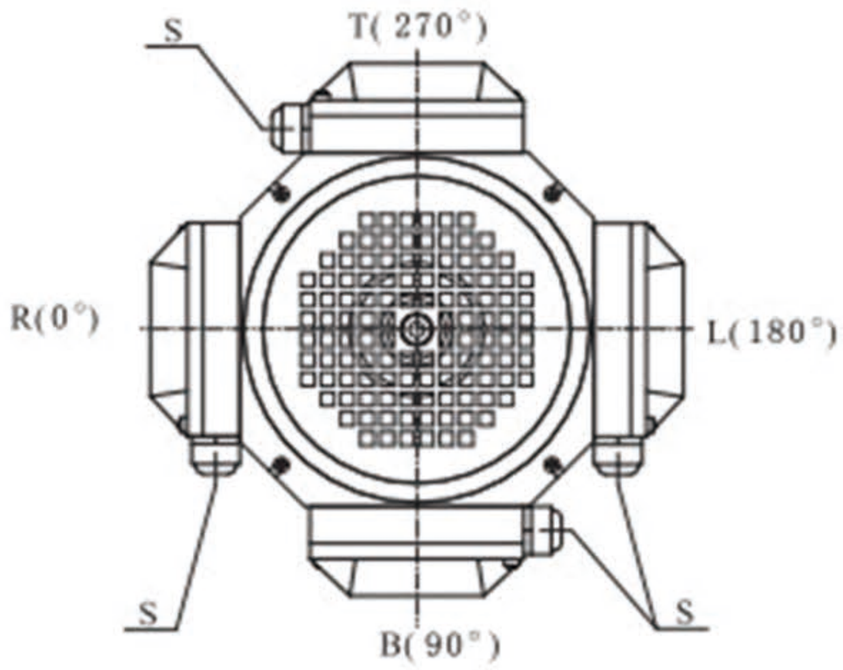

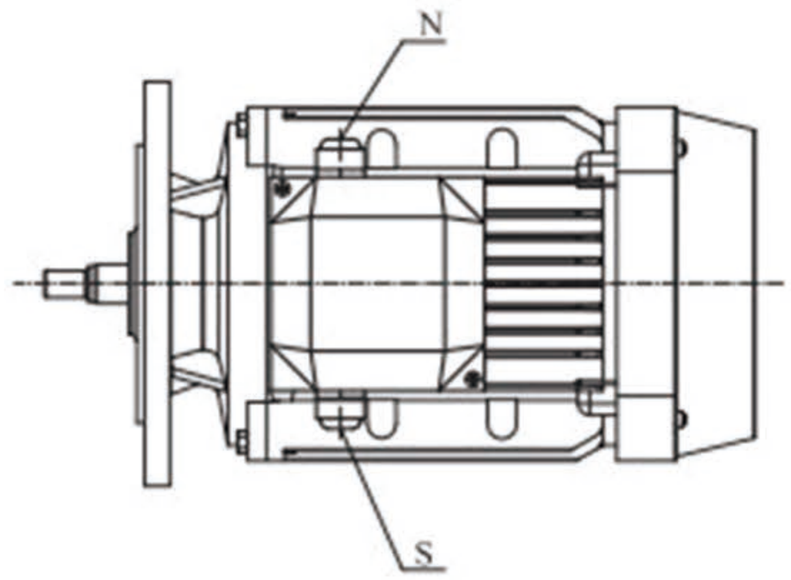

R(0°): 默认接线盒方位

R(0°): Default Position for Motor Terminal Box

注：图为M1安装方位。

Mark :This picture is the installation position of M1

S: 默认进线方位

S: Default Line Position

说明:

上图的视图方向为：从电机尾部的风罩向前看。

可提供R（0°）、B（90°）、L（180°）、T（270°）四种电机接线盒方位。其中R（0°）位置是默认方位。如无特别说明，将按默认方位提供。

可提供S和N两种进线方位，其中S位置是默认方位。如无特别说明，将按默认方位提供。

Notes:

The view direction of above figure: from the fan cover in the end of the motor to look forward.

There will be four position for motor terminal box: R(0°)、B(90°)、L(180°)、T(270°). And default position is R(0°).If no special explaination, it will be provided in default position.If no special explaination, it will be provided in default position.

There will be two line position: S and N. Default position is S.If no special explaination, it will be provided in default position.If no special explaination, it will be provided in default position.

3.4.2 油位符号说明 / Oil Level Symbol Explanation

符号 Symbol	含义	Meaning
	通气帽	BREATHER VALVE
	油标	OIL LEVEL PLUG
	排油塞	OIL DRAIN PLUG

3.4.3 安装位置示意 / Mounting Position Designation

GF..安装位置示意图 / GF.. Mounting Position Designation

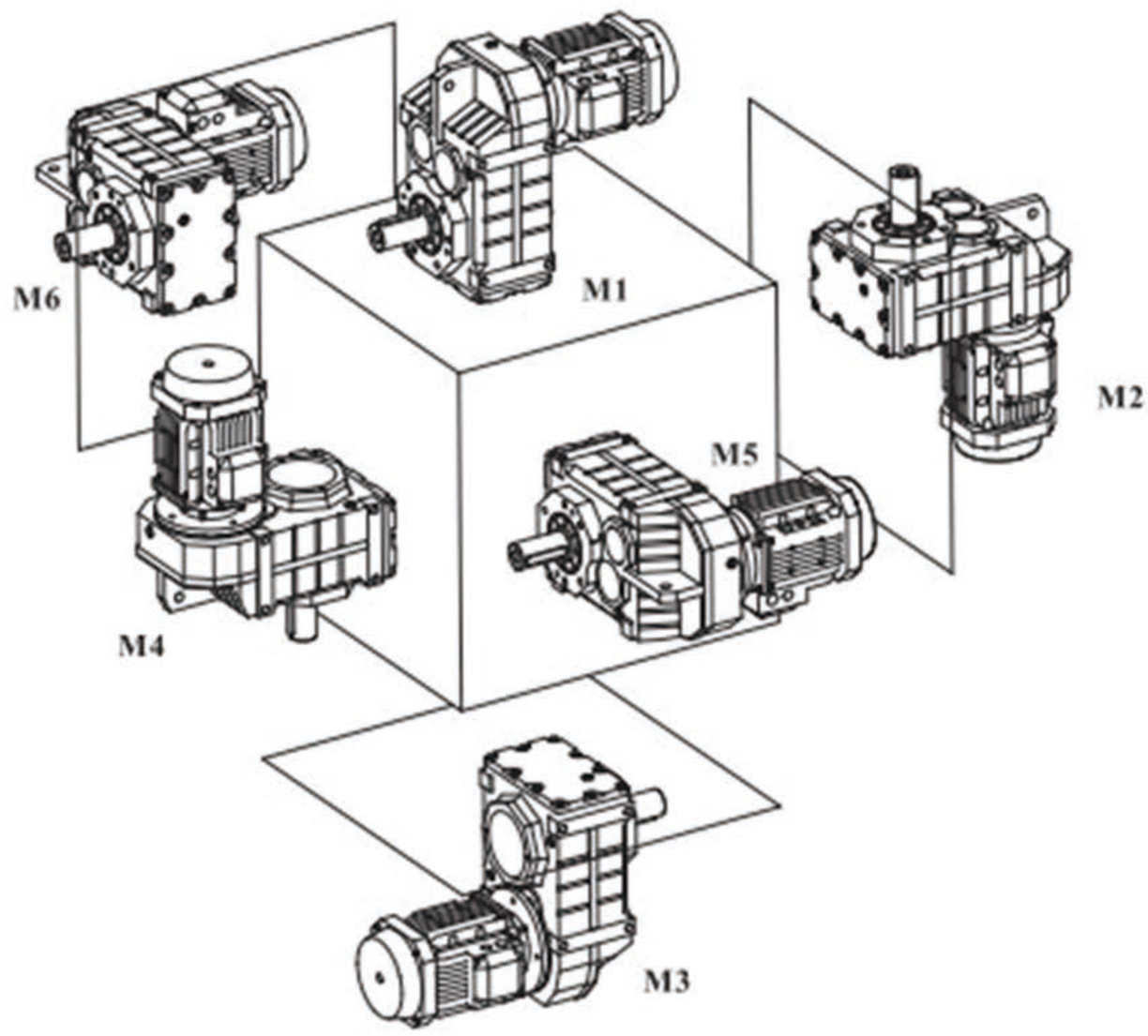

GFF..安装位置示意图 / GFF.. Mounting Position Designation

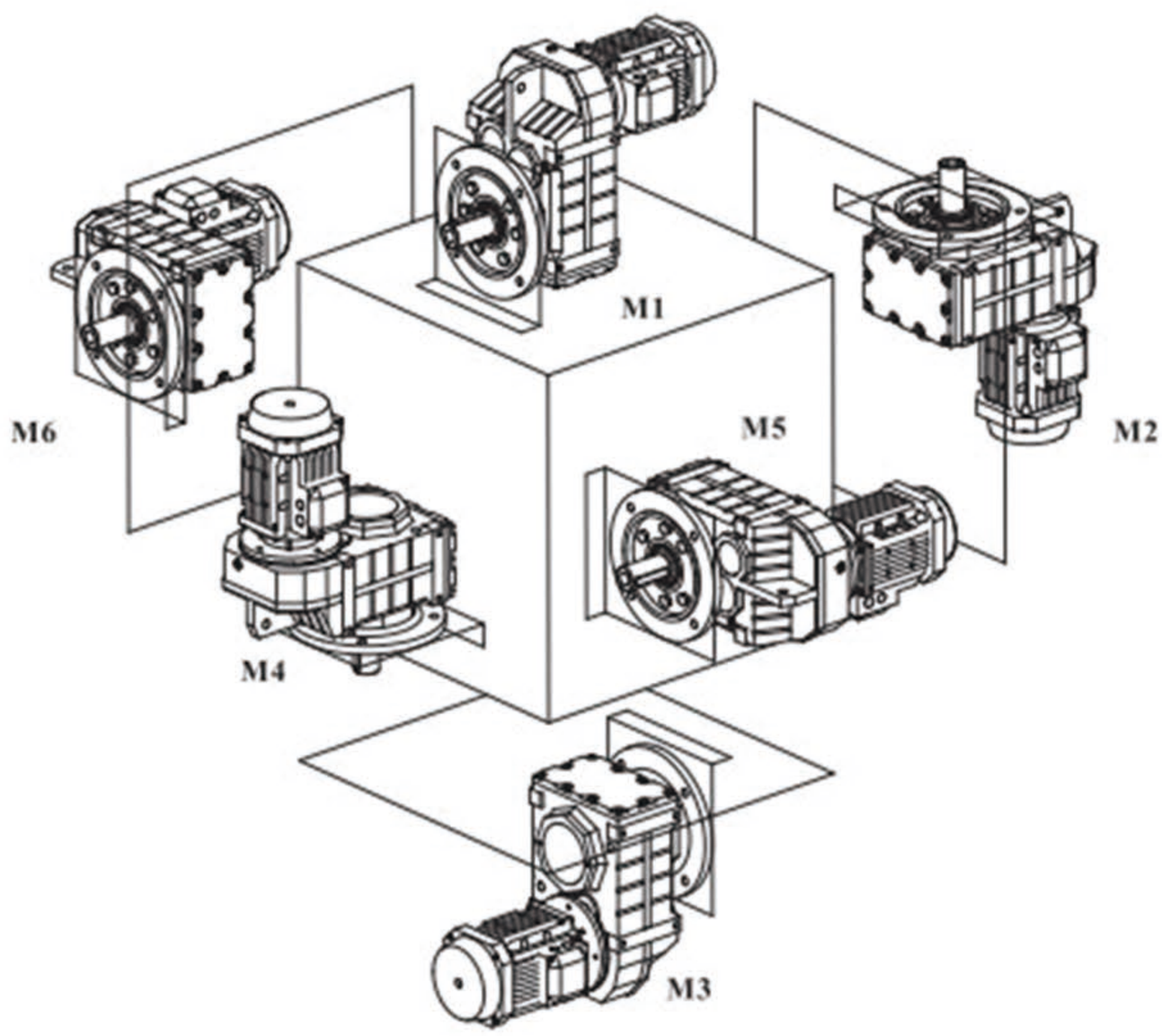

3.4.4 安装方位 / Mounting Positions

*→提示:

当采用下表列出的安装方式及输入转速时，齿轮箱会产生不可忽视的搅油损失。请联系本公司。

*→**Reminder:**

Increased churning losses may arise in the following mounting positions. Contact Greatwall Machinery.

安装方式 Mounting Position	齿轮箱规格 Gear Unit Size	输入转速 Input Speed（r/min）
M2，M3，M4，M5，M6	97-107	>2500
	>107	>1500

GF,GFA27B~157B,GFH27B-157B,GFV27B-107B

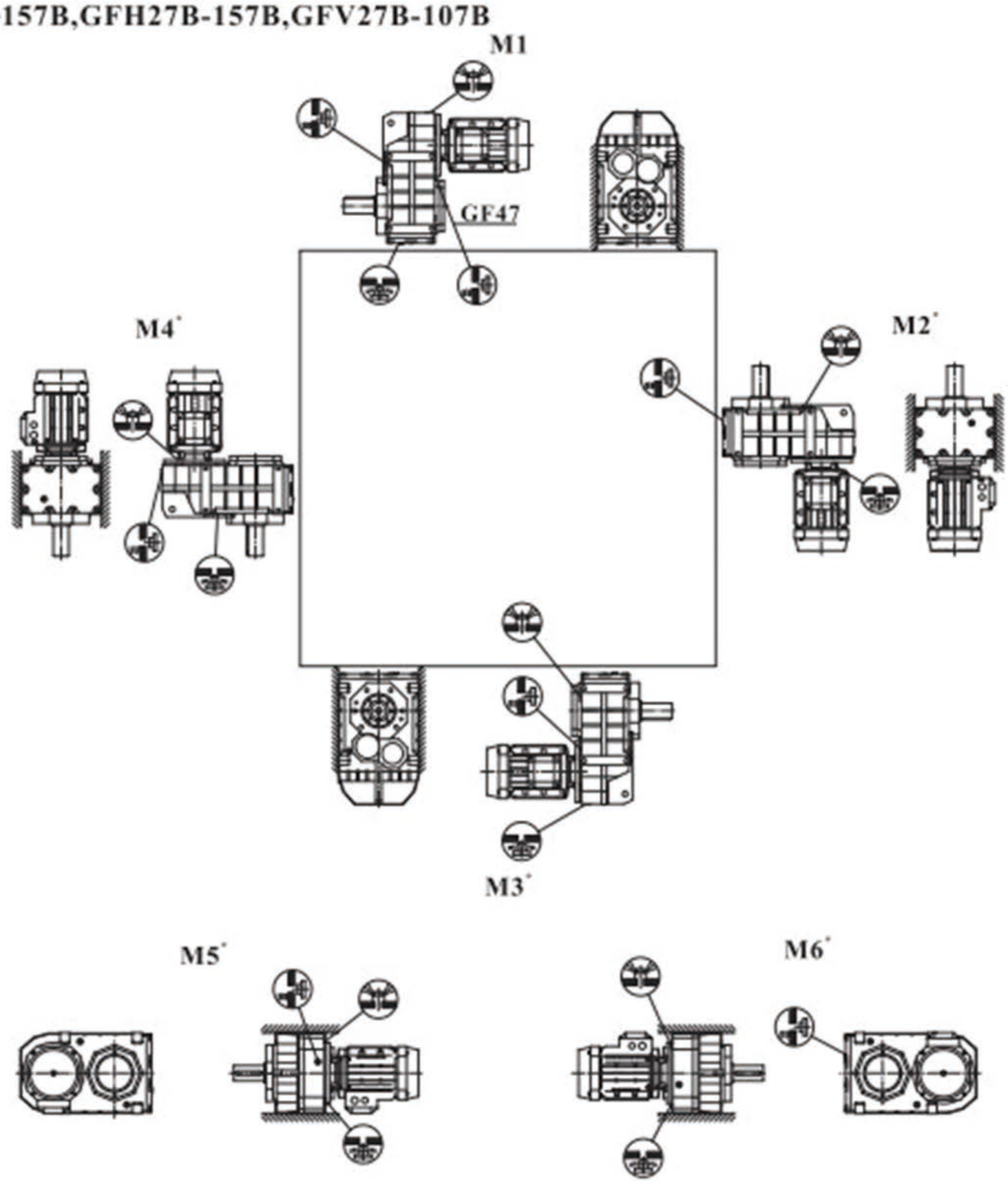

GF..27 M1,M3,M5,M6

GF..27 M1-M6

GF..27 M1,M3,M5,M6

*→page 095

GF

GFA27-157,GFH27-157,GFV27-107

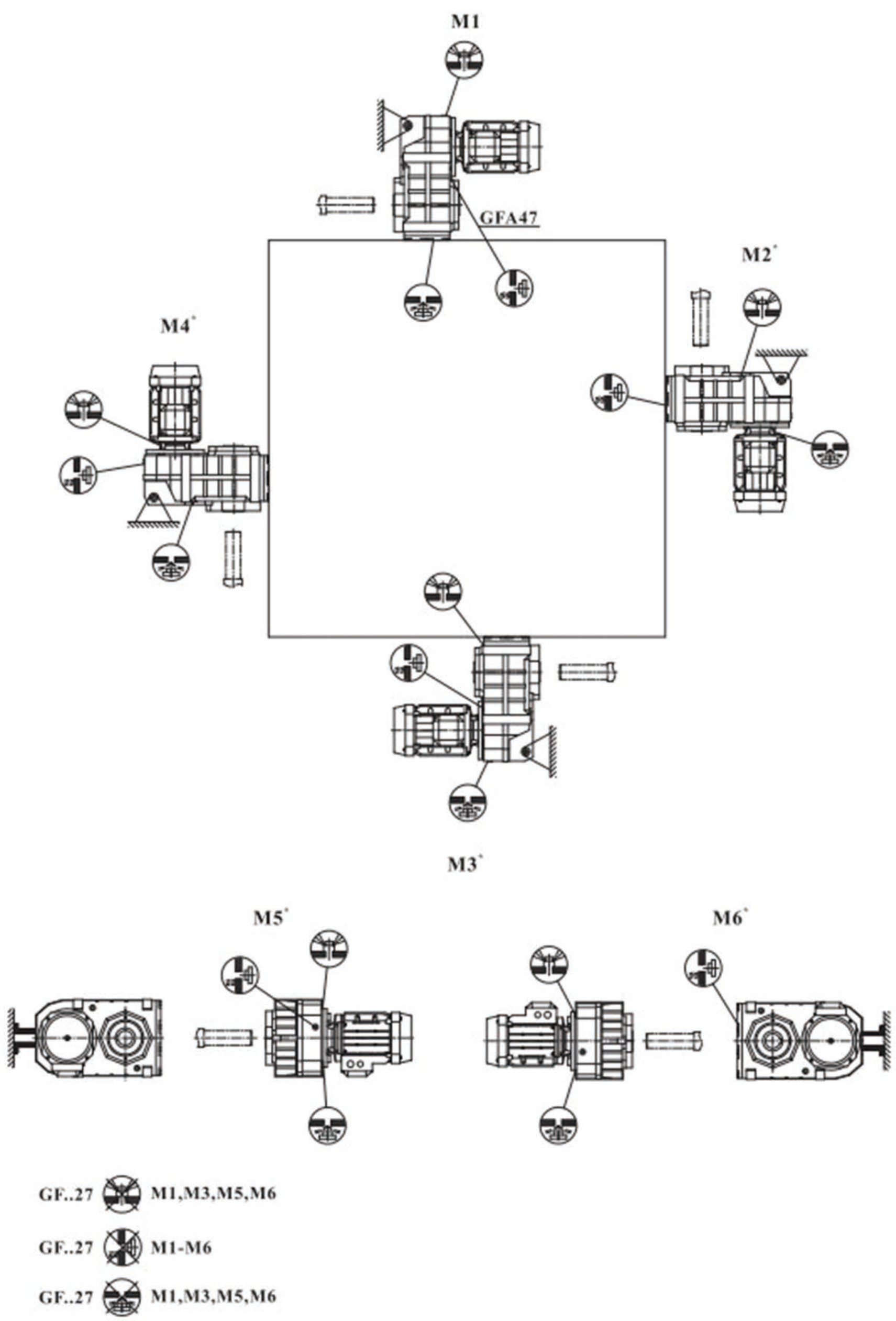

*→page 095

GFF,GFAF,GFHF,GFAZ,GFHZ27-157,GFVF27-107,GFVZ27-107

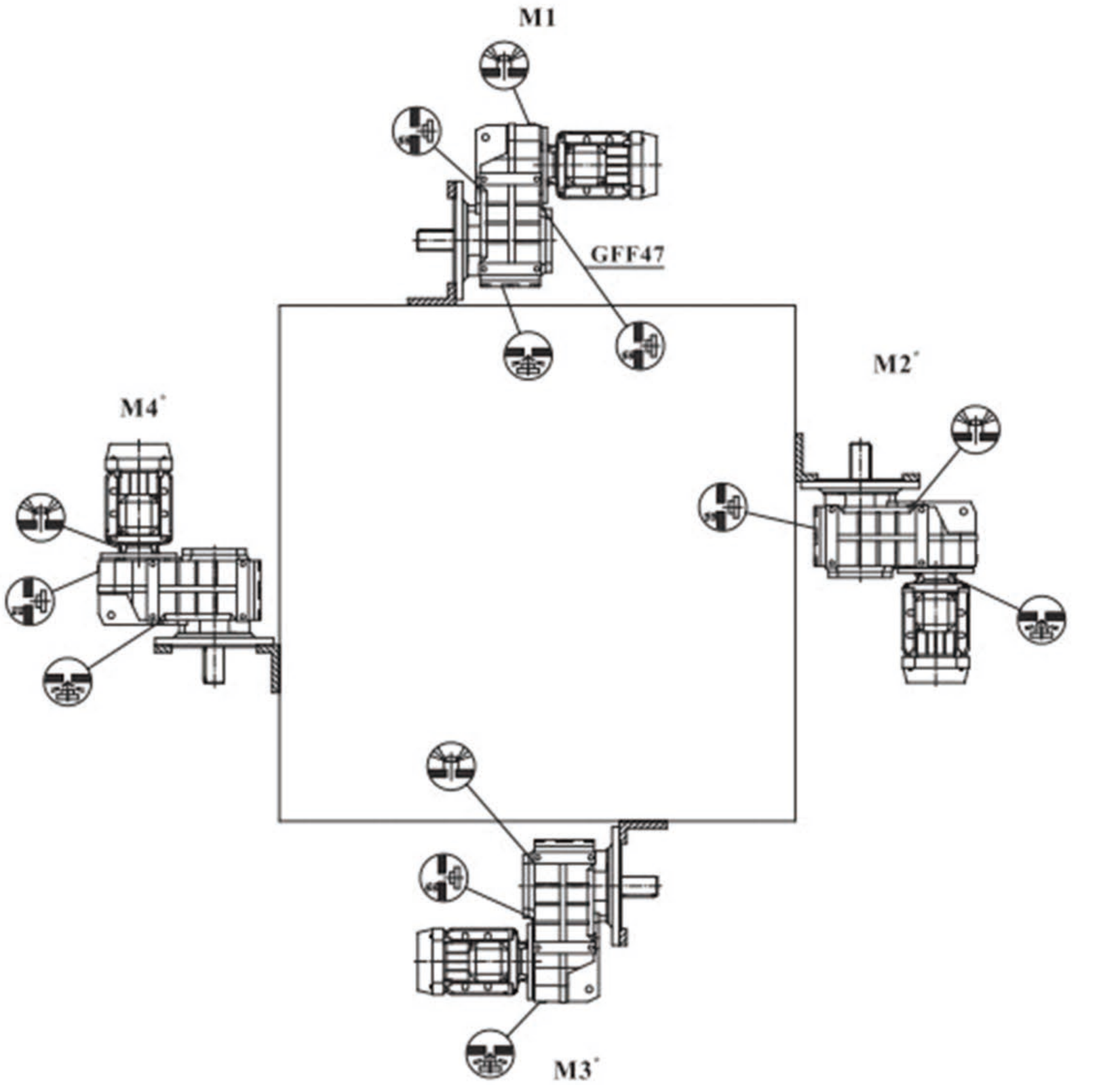

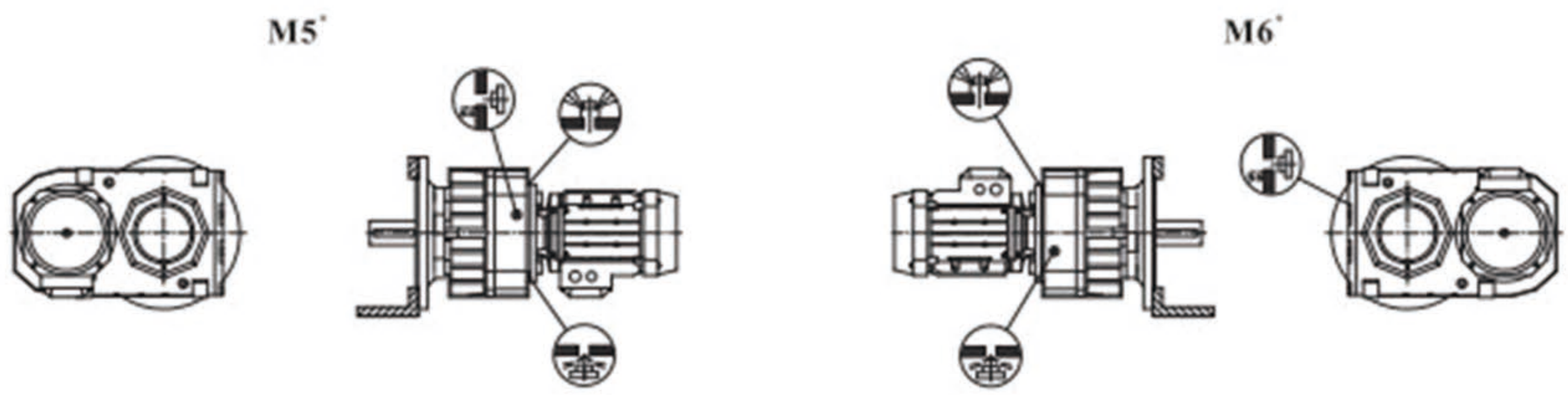

GF..27 M1,M3,M5,M6

GF..27 M1-M6

GF..27 M1,M3,M5,M6

* →page 095

3.5 减速器组合表 / Gear Unit Combination Table

为得到特别低的输出转速，可以通过GRF齿轮箱与 GF 齿轮箱相连的方式实现。

当采用这种传动方案时，可配置电动机的功率依赖于减速机的极限输出扭矩，而不能通过电动机的额定功率和减速机的总传动比计算得出减速机的输出扭矩。

GRF series of gear units and GF series of gear units can be connected together to get special output speed.

For this transmission scheme, the power of the motor depends on the limit output torque of the gear-box, instead of the output torque calculated based on rated power of the motor and the transmission ratio of the gear unit.

GF..与GRF..齿轮箱可能的组合 / Possible Combination of GF.. and GRF..

	GRF17	GRF27	GRF37	GRF47	GRF57	GRF67	GRF77	GRF87	GRF97	GRF107
GF..27										
GF..37										
GF..47										
GF..57										
GF..67										
GF..77										
GF..87										
GF..97										
GF..107										
GF..127										
GF..157										

说明：

▭ ：表示可能的组合。

▭ ：表示不允许的组合。

Notes:

▭ : Possible Combination.

▭ : Impossible Combination.

3.6 GF..功率配置 / GF..Power Configuration

GF27 n_1=1400 1/min									130Nm
n_2 [1/min]	M_{2max} [Nm]	Fr [N]	i	0.12 ~0.55	0.75 1.10	1.50	2.20		
3									
9.90	130	4500	140.74						
11.0	130	4500	129.09						
13.0	130	4500	109.90						
15.0	130	4500	94.76						
16.0	130	4500	88.32						
18.0	130	4500	77.21						
19.0	130	4500	72.37						
22.0	130	4400	63.86						
25.0	130	4180	56.62						
28.0	130	3980	50.19						
30.0	130	3860	46.78						
34.0	130	3640	40.89						
37.0	130	3530	38.33						
41.0	130	3340	33.83						
2									
47.0	130	3140	29.56						
52.0	130	3030	27.18						
60.0	130	2820	23.25						
69.0	130	2630	20.15						
74.0	130	2550	18.84						
86.0	130	2370	16.28						
101	130	2180	13.84						
113	130	2060	12.35						
133	130	1900	10.55						
142	130	1830	9.88						
149	130	1660	9.40						
172	123	1580	8.13						
203	114	1530	6.91						
227	109	1480	6.17						
266	100	1440	5.27						
284	96	1420	4.93						
337	87	1380	4.16						

GF37 n_1=1400 1/min									200Nm
n_2 [1/min]	M_{2max} [Nm]	Fr [N]	i	0.12 ~0.55	0.75 1.10	1.50	2.20 3.00		
3									
11.0	200	4290	128.51						
12.0	200	4290	117.88						
14.0	200	4290	100.36						
16.0	200	4290	86.53						
17.0	200	4290	80.65						

GF37 n_1=1400 1/min									200Nm
n_2 [1/min]	M_{2max} [Nm]	Fr [N]	i	0.12 ~0.55	0.75 1.10	1.50	2.20 3.00		
3									
20.0	200	4290	70.50						
21.0	200	4290	66.09						
24.0	200	4290	58.32						
26.0	200	4290	54.54						
27.0	200	4290	51.70						
30.0	200	4290	47.02						
32.0	200	4290	43.83						
37.0	200	4290	38.31						
39.0	200	4290	35.91						
44.0	200	4290	31.69						
50.0	200	4060	28.09						
59.0	200	3760	23.88						
2									
59.0	200	3740	23.63						
68.0	200	3500	20.57						
73.0	200	3390	19.27						
82.0	200	3180	17.03						
89.0	200	3070	15.81						
98.0	200	2910	14.33						
109	200	2750	12.87						
126	190	2620	11.08						
134	185	2580	10.42						
156	175	2460	8.97						
175	170	2360	8.01						
188	145	2350	7.44						
208	140	2270	6.74						
231	135	2190	6.05						
269	125	2120	5.21						
286	120	2100	4.90						
332	110	2030	4.22						
371	105	1970	3.77						

GF47 n_1=1400 1/min									400Nm
n_2 [1/min]	M_{2max} [Nm]	Fr [N]	i	0.12 ~0.55	0.75 1.10	1.50	2.20 3.00		
3									
7.30	400	5920	190.76						
8.00	400	5920	175.38						
9.30	400	5920	150.06						
11.0	400	5920	130.07						
12.0	400	5920	121.57						
13.0	400	5920	105.09						

GF47 n_1=1400 1/min									400Nm
n_2 [1/min]	M_{2max} [Nm]	Fr [N]	i	0.12 ~0.55	0.75 1.10	1.50	2.20 3.00		
3									
16.0	400	5920	89.29						
18.0	400	5920	79.72						
21.0	400	5920	68.09						
21.0	400	5920	65.36						
25.0	400	5920	56.49						
29.0	400	5920	48.00						
33.0	400	5920	42.86						
38.0	400	5920	36.61						
41.0	400	5920	34.29						
48.0	400	5790	28.88						
2									
45.0	400	5920	30.86						
48.0	400	5830	29.32						
54.0	400	5460	25.72						
64.0	400	5030	21.82						
71.0	400	4770	19.70						
81.0	400	4450	17.33						
86.0	400	4320	16.36						
101	400	3950	13.93						
111	400	3740	12.66						
128	400	3440	10.97						
156	330	3250	8.96						
178	380	2630	7.88						
188	380	2530	7.44						
221	350	2470	6.34						
243	340	2390	5.76						
281	320	2310	4.99						

GF57 n_1=1400 1/min									600Nm
n_2 [1/min]	M_{2max} [Nm]	Fr [N]	i	0.12 ~0.55	0.75 1.10	1.50	2.20 3.00	4.00	5.50
3									
7.00	600	9200	199.70						
7.60	600	9200	183.60						
8.90	600	9200	157.09						
10.0	600	9200	136.16						
11.0	600	9200	127.27						
13.0	600	9200	110.01						
15.0	600	9200	93.47						
17.0	600	9200	83.46						
19.0	600	9200	72.98						
21.0	600	9200	68.22						
24.0	600	9200	58.97						
28.0	600	9200	50.10						

GF57 n_1=1400 1/min									600Nm
n_2 [1/min]	M_{2max} [Nm]	Fr [N]	i	0.12 ~0.55	0.75 1.10	1.50	2.20 3.00	4.00	5.50
3									
31.0	600	9160	44.73						
37.0	600	8510	38.21						
39.0	600	8250	35.79						
46.0	590	7650	30.15						
2									
35.0	290	10500	40.13						
41.0	500	8670	34.24						
47.0	545	7890	29.94						
49.0	535	7760	28.45						
56.0	575	7060	24.96						
66.0	600	6350	21.17						
73.0	600	6020	19.11						
83.0	600	5620	16.81						
88.0	600	5450	15.88						
104	600	4980	13.52						
114	600	4710	12.29						
132	600	4320	10.64						
150	420	4760	9.31						
171	420	4450	8.19						
181	420	4310	7.73						
213	420	3940	6.58						
234	420	3730	5.98						
270	415	3460	5.18						

GF67 n_1=1400 1/min									820Nm
n_2 [1/min]	M_{2max} [Nm]	Fr [N]	i	0.12 ~0.55	0.75 1.10	1.50	2.20 3.00	4.00	5.50
3									
6.10	820	10300	228.99						
7.20	820	10300	195.39						
8.20	820	10300	170.85						
8.60	820	10300	162.31						
9.80	820	10300	142.40						
12.0	820	10300	120.79						
13.0	820	10300	109.04						
15.0	820	10300	95.94						
15.0	820	10300	90.59						
18.0	820	10300	79.76						
21.0	820	10300	67.65						
23.0	820	10300	61.07						
26.0	820	10300	53.73						
28.0	820	10300	50.74						
32.0	820	10300	43.20						
36.0	780	10700	39.26						
41.0	740	11000	34.01						

GF67 n_1=1400 1/min									820Nm
n_2 [1/min]	M_{2max} [Nm]	Fr [N]	i	0.12 ~0.55	0.75 1.10	1.50	2.20 3.00	4.00	5.50
2									
39.0	820	10300	36.30						
44.0	820	10300	32.08						
51.0	820	10300	27.41						
56.0	820	10300	25.13						
63.0	820	10300	22.05						
67.0	820	10300	20.90						
77.0	820	10300	18.29						
85.0	820	10300	16.48						
97.0	820	10300	14.46						
110	820	10300	12.76						
124	820	10300	11.31						
145	820	10300	9.66						
154	530	11400	9.08						
163	570	10900	8.60						
186	610	10100	7.53						
206	620	9660	6.78						
235	610	9200	5.95						
267	590	8850	5.25						
300	560	8590	4.66						
353	500	8390	3.97						

GF77 n_1=1400 1/min									1500Nm
n_2 [1/min]	M_{2max} [Nm]	Fr [N]	i	0.18 ~0.55	0.75 1.10	1.50	2.20 3.00	4.00	5.50 7.50
3									
5.00	1500	15700	281.71						
5.30	1500	15700	262.93						
6.20	1500	15700	225.79						
7.10	1500	15700	198.31						
7.40	1500	15700	188.40						
8.40	1500	15700	166.47						
9.80	1500	15700	142.27						
11.0	1500	15700	130.42						
12.0	1500	15700	114.45						
13.0	1500	15700	108.46						
15.0	1500	15700	94.93						
16.0	1500	15700	85.52						
19.0	1500	15700	75.02						
19.0	1500	15700	72.50						
21.0	1500	15700	66.46						
24.0	1500	15700	58.32						
25.0	1500	15700	55.27						
29.0	1500	15700	48.37						
32.0	1500	15700	43.58						
37.0	1500	15700	38.23						
41.0	1500	15700	33.74						
47.0	1500	15700	29.91						
55.0	1450	16100	25.54						

GF77 n_1=1400 1/min									1500Nm
n_2 [1/min]	M_{2max} [Nm]	Fr [N]	i	0.18 ~0.55	0.75 1.10	1.50	2.20 3.00	4.00	5.50 7.50
2									
38.0	1110	17900	36.58						
44.0	1380	16500	31.51						
49.0	1430	16200	28.75						
55.0	1500	15700	25.50						
65.0	1500	15700	21.43						
71.0	1500	15700	19.70						
80.0	1500	15700	17.49						
90.0	1500	15700	15.64						
100	1500	15700	14.06						
115	1500	14900	12.20						
128	1500	14200	10.93						
151	1080	13800	9.30						
169	1080	13100	8.26						
189	1080	12500	7.39						
211	1080	12000	6.64						
243	1080	11300	5.76						
271	1080	10700	5.16						
327	1010	10200	4.28						

GF77 n_1=1400 1/min									1500Nm
n_2 [1/min]	M_{2max} [Nm]	Fr [N]	i	11.0					
3									
5.00	1500	15700	281.71						
5.30	1500	15700	262.93						
6.20	1500	15700	225.79						
7.10	1500	15700	198.31						
7.40	1500	15700	188.40						
8.40	1500	15700	166.47						
9.80	1500	15700	142.27						
11.0	1500	15700	130.42						
12.0	1500	15700	114.45						
13.0	1500	15700	108.46						
15.0	1500	15700	94.93						
16.0	1500	15700	85.52						
19.0	1500	15700	75.02						
19.0	1500	15700	72.50						
21.0	1500	15700	66.46						
24.0	1500	15700	58.32						
25.0	1500	15700	55.27						
29.0	1500	15700	48.37						
32.0	1500	15700	43.58						
37.0	1500	15700	38.23						
41.0	1500	15700	33.74						
47.0	1500	15700	29.91						
55.0	1450	16100	25.54						
2									
38.0	1110	17900	36.58						
44.0	1380	16500	31.51						

GF77 n_1=1400 1/min									1500Nm
n_2 [1/min]	M_{2max} [Nm]	Fr [N]	i	11.0					
2									
49.0	1430	16200	28.75						
55.0	1500	15700	25.50						
65.0	1500	15700	21.43						
71.0	1500	15700	19.70						
80.0	1500	15700	17.49						
90.0	1500	15700	15.64						
100	1500	15700	14.06						
115	1500	14900	12.20						
128	1500	14200	10.93						
151	1080	13800	9.30						
169	1080	13100	8.26						
189	1080	12500	7.39						
211	1080	12000	6.64						
243	1080	11300	5.76						
271	1080	10700	5.16						
327	1010	10200	4.28						

GF87 n_1=1400 1/min									3000Nm
n_2 [1/min]	M_{2max} [Nm]	Fr [N]	i	0.55	0.75 1.10	1.50	2.20 3.00	4.00	5.50 7.50
3									
5.20	3000	19800	270.68						
5.50	3000	19800	255.37						
6.10	3000	19800	228.93						
7.10	3000	19800	197.20						
7.80	3000	19800	179.97						
8.80	3000	19800	159.61						
10.0	3000	19800	134.16						
11.0	3000	19800	123.29						
13.0	3000	19800	109.49						
14.0	3000	19800	97.89						
16.0	3000	19800	88.01						
18.0	3000	19800	76.39						
20.0	3000	19600	68.40						
25.0	3000	17700	56.75						
28.0	2940	16800	50.36						
31.0	2820	16200	45.28						
36.0	2720	15400	39.30						
40.0	2610	14900	35.19						
48.0	2510	13800	29.20						
2									
41.0	2610	14600	33.92						
49.0	2450	13900	28.78						
53.0	3000	11100	26.50						
59.0	3000	10300	23.68						
66.0	3000	9520	21.32						
73.0	3000	8840	19.31						
82.0	3000	8040	17.12						
90.0	3000	7390	15.48						

GF87 n_1=1400 1/min									3000Nm
n_2 [1/min]	M_{2max} [Nm]	Fr [N]	i	0.55	0.75 1.10	1.50	2.20 3.00	4.00	5.50 7.50
2									
107	3000	6370	13.12						
122	3000	5580	11.46						
146	2880	5050	9.58						
169	1530	8890	8.29						
190	1530	8280	7.35						
211	1530	7790	6.65						
249	1530	7020	5.63						
285	1530	6430	4.92						
340	1460	5980	4.12						

GF87 n_1=1400 1/min									3000Nm
n_2 [1/min]	M_{2max} [Nm]	Fr [N]	i	11.0 15.0	18.5 22.0				
3									
5.20	3000	19800	270.68						
5.50	3000	19800	255.37						
6.10	3000	19800	228.93						
7.10	3000	19800	197.20						
7.80	3000	19800	179.97						
8.80	3000	19800	159.61						
10.0	3000	19800	134.16						
11.0	3000	19800	123.29						
13.0	3000	19800	109.49						
14.0	3000	19800	97.89						
16.0	3000	19800	88.01						
18.0	3000	19800	76.39						
20.0	3000	19600	68.40						
25.0	3000	17700	56.75						
28.0	2940	16800	50.36						
31.0	2820	16200	45.28						
36.0	2720	15400	39.30						
40.0	2610	14900	35.19						
48.0	2510	13800	29.20						
2									
41.0	2610	14600	33.92						
49.0	2450	13900	28.78						
53.0	3000	11100	26.50						
59.0	3000	10300	23.68						
66.0	3000	9520	21.32						
73.0	3000	8840	19.31						
82.0	3000	8040	17.12						
90.0	3000	7390	15.48						
107	3000	6370	13.12						
122	3000	5580	11.46						
146	2880	5050	9.58						
169	1530	8890	8.29						
190	1530	8280	7.35						
211	1530	7790	6.65						
249	1530	7020	5.63						
285	1530	6430	4.92						
340	1460	5980	4.12						

GF97 n_1=1400 1/min									4300Nm
n_2 [1/min]	M_{2max} [Nm]	Fr [N]	i	1.10 ~1.50	2.20 3.00	4.00	5.50 7.50	11.0 15.0	18.5 22.0
3									
5.10	4300	29900	276.77						
5.50	4300	29900	253.41						
6.30	4300	29900	223.88						
7.40	4300	29900	189.92						
8.00	4300	29900	174.87						
9.00	4300	29900	156.30						
9.90	4300	29900	140.71						
11.0	4300	29900	127.42						
12.0	4300	29900	112.99						
14.0	4300	29900	102.16						
14.0	4300	29900	97.58						
16.0	4300	29900	89.85						
16.0	4300	29900	86.59						
17.0	4300	29900	80.31						
19.0	4300	29900	75.63						
19.0	4300	29900	72.29						
21.0	4300	29000	65.47						
24.0	4300	27200	58.06						
27.0	4300	25800	52.49						
31.0	4300	23600	44.49						
36.0	4300	21900	38.86						
43.0	4300	19800	32.50						
2									
32.0	3070	27600	43.28						
38.0	3070	25500	36.64						
41.0	4300	20300	33.91						
46.0	4300	19000	30.39						
51.0	4300	17900	27.44						
56.0	4300	16800	24.92						
63.0	4300	15600	22.11						
70.0	4300	14600	20.07						
81.0	4300	13200	17.25						
93.0	4300	11900	15.06						
110	4300	10500	12.77						
125	4100	10000	11.16						
155	2360	13400	9.06						
170	2360	12600	8.22						
198	2360	11500	7.07						
227	2250	11100	6.17						
268	2150	10400	5.23						
306	2050	9950	4.57						
362	1800	9960	3.87						

GF97 n_1=1400 1/min									4300Nm
n_2 [1/min]	M_{2max} [Nm]	Fr [N]	i	30.0					
3									
5.10	4300	29900	276.77						
5.50	4300	29900	253.41						

GF97 n_1=1400 1/min									4300Nm
n_2 [1/min]	M_{2max} [Nm]	Fr [N]	i	30.0					
3									
6.30	4300	29900	223.88						
7.40	4300	29900	189.92						
8.00	4300	29900	174.87						
9.00	4300	29900	156.30						
9.90	4300	29900	140.71						
11.0	4300	29900	127.42						
12.0	4300	29900	112.99						
14.0	4300	29900	102.16						
14.0	4300	29900	97.58						
16.0	4300	29900	89.85						
16.0	4300	29900	86.59						
17.0	4300	29900	80.31						
19.0	4300	29900	75.63						
19.0	4300	29900	72.29						
21.0	4300	29000	65.47						
24.0	4300	27200	58.06						
27.0	4300	25800	52.49						
31.0	4300	23600	44.49						
36.0	4300	21900	38.86						
43.0	4300	19800	32.50						
2									
32.0	3070	27600	43.28						
38.0	3070	25500	36.64						
41.0	4300	20300	33.91						
46.0	4300	19000	30.39						
51.0	4300	17900	27.44						
56.0	4300	16800	24.92						
63.0	4300	15600	22.11						
70.0	4300	14600	20.07						
81.0	4300	13200	17.25						
93.0	4300	11900	15.06						
110	4300	10500	12.77						
125	4100	10000	11.16						
155	2360	13400	9.06						
170	2360	12600	8.22						
198	2360	11500	7.07						
227	2250	11100	6.17						
268	2150	10400	5.23						
306	2050	9950	4.57						
362	1800	9960	3.87						

GF107 n_1=1400 1/min									7840Nm
n_2 [1/min]	M_{2max} [Nm]	Fr [N]	i	2.20 3.00	4.00	5.50 7.50	11.0 15.0	18.5 22.0	30.0 ~45.0
3									
5.50	7680	49800	254.40						
6.50	7680	49800	215.37						
7.00	7680	49800	199.31						
7.80	7680	49800	178.64						

GF107 n_1=1400 1/min — 7840Nm

n_2 [1/min]	M_{2max} [Nm]	Fr [N]	i	2.20 3.00	4.00	5.50 7.50	11.0 15.0	18.5 22.0	30.0 ~45.0
3									
8.70	7680	49800	161.28						
9.60	7680	49800	146.49						
11.0	7680	49800	129.97						
12.0	7680	49800	117.94						
14.0	7680	49800	101.38						
15.0	7680	49800	92.47						
16.0	7680	49800	88.49						
17.0	7680	49800	83.99						
19.0	7680	49800	74.52						
21.0	7680	49800	67.62						
24.0	7680	47800	58.12						
28.0	7680	45100	50.73						
33.0	7680	42000	43.03						
37.0	7680	39500	37.61						
44.0	7680	36500	31.80						
2									
41.0	7400	38300	33.79						
51.0	7840	33300	27.57						
56.0	7840	31500	25.14						
64.0	7840	28800	21.76						
73.0	7840	26500	19.20						
84.0	7840	23900	16.58						
95.0	7680	22400	14.67						
114	7000	22600	12.33						
141	6500	21500	9.96						
144	4910	23500	9.69						
167	4800	22000	8.37						
189	4600	21300	7.40						
225	4600	19000	6.22						
278	4600	16400	5.03						

GF127 n_1=1400 1/min — 12000Nm

n_2 [1/min]	M_{2max} [Nm]	Fr [N]	i	7.50	11.0 15.0	18.5 22.0	30.0 ~45.0	55.0 90.0
3								
8.20	12000	90000	170.83					
9.10	12000	90000	153.67					
11.0	12000	90000	125.37					
12.0	12000	88000	114.34					
14.0	12000	83000	98.95					
16.0	12000	79000	87.31					
19.0	12000	74300	75.41					
20.0	12000	72100	70.07					
22.0	12000	69400	63.91					
25.0	12000	65200	55.31					
29.0	12000	61300	48.80					
33.0	12000	56800	42.15					
38.0	12000	53200	37.28					
45.0	12000	48300	31.33					
55.0	12000	42400	25.30					

GF127 n_1=1400 1/min — 12000Nm

n_2 [1/min]	M_{2max} [Nm]	Fr [N]	i	7.50	11.0 15.0	18.5 22.0	30.0 ~45.0	55.0 90.0
2								
52.0	8500	55300	26.86					
57.0	8500	53300	24.57					
65.0	12000	38000	21.38					
74.0	11000	38800	18.87					
86.0	11000	35400	16.36					
96.0	11000	32600	14.55					
112	10000	33300	12.54					
137	9500	30900	10.19					
158	7000	36400	8.86					
178	6000	37000	7.88					
206	7000	32200	6.80					
254	6000	31700	5.52					
299	6000	29500	4.68					

GF157 n_1=1400 1/min — 18000Nm

n_2 [1/min]	M_{2max} [Nm]	Fr [N]	i	11.0 15.0	18.5 22.0	30.0 ~45.0	55.0 90.0	110 132
3								
5.20	18000	100300	267.43					
6.40	18000	100300	217.62					
7.90	18000	100300	178.20					
8.60	18000	100300	162.96					
9.90	18000	100300	141.80					
11.0	18000	100300	125.14					
13.0	18000	100300	108.49					
15.0	18000	100300	96.53					
16.0	18000	95800	85.80					
18.0	18000	92300	78.46					
21.0	18000	87000	68.28					
23.0	18000	82500	60.25					
27.0	18000	77500	52.24					
30.0	18000	73600	46.48					
35.0	18000	68900	40.06					
43.0	18000	62500	32.55					
51.0	18000	57800	27.60					
2								
26.0	8000	98400	53.55					
32.0	10000	87800	43.94					
39.0	11000	79300	35.75					
49.0	17000	60800	28.60					
55.0	15000	61500	25.43					
63.0	18000	51800	22.16					
71.0	17000	50900	19.77					
83.0	18000	44900	16.85					
100	17000	42500	13.96					
117	16000	40900	11.92					

3.7 GF..性能参数 / GF.. Performance Parameters

n_2 [1/min]	M_2 [Nm]	i	Fr [N]	K	Frame size		Input Configuration
P_1=0.12kw							
0.06	13900	22323	86700	0.85	GFA	127 GRF77	Y..63M$_1$-4
0.07	11800	19048	90000	1.00	GFAF	127 GRF77	AM63
0.08	10300	16656	90000	1.15	GF	127 GRF77	AD2
0.09	9180	14722	90000	1.30	GFF	127 GRF77	
0.11	7990	12912	90000	1.50			
0.12	7040	11656	90000	1.70			
0.14	6310	10191	90000	1.90			
0.10	8850	14767	65000	0.90	GFA	107 GRF77	Y..63M$_1$-4
0.11	7550	11348	65000	1.05	GFAF	107 GRF77	AM63
0.13	6600	10039	65000	1.20	GF	107 GRF77	AD2
0.14	5890	8548	65000	1.35	GFF	107 GRF77	
0.17	5150	7674	65000	1.55			
0.19	4490	6767	65000	1.80			
0.22	3700	5954	65000	2.20			
0.24	3210	5223	65000	2.50			
0.27	2910	4567	65000	2.70			
0.32	2670	3521	65000	3.00			
0.21	4140	6469	30400	1.05	GFA	97 GRF57	Y..63M$_1$-4
0.25	3820	5615	31300	1.15	GFAF	97 GRF57	AM63
0.28	3320	4961	32500	1.30	GF	97 GRF57	AD2
0.32	2900	4333	33500	1.50	GFF	97 GRF57	
0.35	2690	3906	34000	1.60	GFA	97 GRF57	Y..63M$_1$-4
0.41	2320	3352	34800	1.85	GFAF	97 GRF57	AM63
0.47	1910	2907	35500	2.20	GF	97 GRF57	AD2
0.54	1750	2553	35800	2.40	GFF	97 GRF57	
0.33	2760	4245	23800	1.10	GFA	87 GRF57	Y..63M$_1$-4
0.37	2210	3721	25800	1.35	GFAF	87 GRF57	AM63
0.43	2240	3244	25700	1.35	GF	87 GRF57	AD2
0.48	1990	2881	26500	1.50	GFF	87 GRF57	
0.54	1780	2576	27100	1.70			
0.63	1510	2199	27800	2.00			
0.72	1300	1930	28300	2.30			
0.81	1170	1709	28600	2.60			
0.92	1030	1493	28900	2.90			
1.10	820	1300	29300	3.70			
1.20	745	1148	29500	4.00			
0.53	1820	2613	13000	0.80	GFA	77 GRF37	Y..63M$_1$-4
0.60	1570	2284	15200	0.95	GFAF	77 GRF37	AM63
0.68	1380	2029	16400	1.10	GF	77 GRF37	AD2
0.80	1180	1728	17500	1.25	GFF	77 GRF37	
0.89	1090	1544	17900	1.40			
1.00	950	1354	18500	1.55			
1.20	840	1200	18800	1.75			
1.30	740	1053	19100	2.00			
1.50	630	910	19400	2.40			
1.70	525	810	19600	2.80			
1.90	460	710	19800	3.20			
0.97	960	1429	7070	0.85	GFA	67 GRF37	Y..63M$_1$-4
1.10	860	1271	9840	0.95	GFAF	67 GRF37	AM63
1.20	725	1102	11100	1.15	GF	67 GRF37	AD2
1.40	635	970	11700	1.30	GFF	67 GRF37	

n_2 [1/min]	M_2 [Nm]	i	Fr [N]	K	Frame size		Input Configuration
P_1=0.12kw							
1.60	560	858	12100	1.45	GFA	67 GRF37	Y..63M$_1$-4
1.80	490	755	12400	1.65	GFAF	67 GRF37	AM63
2.20	415	641	12700	1.95	GF	67 GRF37	AD2
2.40	390	572	12800	2.10	GFF	67 GRF37	
2.70	330	509	13000	2.50			
3.20	285	437	13000	2.80			
1.60	610	851	9100	1.00	GFA	57 GRF37	Y..63M$_1$-4
1.90	520	738	9750	1.15	GFAF	57 GRF37	AM63
2.10	455	646	10200	1.30	GF	57 GRF37	AD2
2.50	385	558	10600	1.55	GFF	57 GRF37	
2.70	345	506	10900	1.75			
3.00	295	452	11100	2.00			
3.20	310	426	11100	1.95			
3.60	270	382	11300	2.20			
4.20	230	330	11500	2.60			
4.60	210	298	11500	2.80			
5.30	185	262	11500	3.20			
2.50	385	543	6100	1.05	GFA	47 GRF17	Y..63M$_1$-4
2.90	330	475	6740	1.20	GFAF	47 GRF17	AM63
3.30	290	419	7150	1.40	GF	47 GRF17	-
2.60	380	524	6190	1.05	GFF	47 GRF17	
2.80	350	489	6530	1.15			
3.20	300	427	7020	1.30			
3.60	265	381	7310	1.50			
4.10	235	334	7550	1.70			
4.70	205	295	7740	1.95			
5.40	172	253	7910	2.30			
4.30	215	322	3990	0.90	GFA	37 GRF17	Y..63M$_1$-4
5.00	192	278	4400	1.05	GFAF	37 GRF17	AM63
5.70	162	242	4750	1.25	GF	37 GRF17	-
6.20	156	221	4820	1.30	GFF	37 GRF17	
4.20	235	326	3710	0.85			
4.80	200	285	4250	1.00			
5.50	177	250	4590	1.15			
6.30	156	219	4820	1.30			
7.40	132	186	5040	1.50			
8.30	118	167	5140	1.70			
6.20	155	221	4500	0.85	GFA	27 GRF17	Y..63M$_1$-4
8.00	119	172	4500	1.10	GFAF	27 GRF17	AM63
9.00	104	153	4500	1.25	GF	27 GRF17	-
11.0	87	130	4500	1.50	GFF	27 GRF17	
6.50	150	211	4500	0.85			
7.40	131	186	4500	1.00			
9.70	102	142	4500	1.25			
11.0	88	124	4500	1.45			
13.0	77	109	4500	1.70			
14.0	67	96	4500	1.95			
6.90	166	199.7	11500	3.60	GFA	57	Y..63M$_1$-4
7.50	152	183.6	11500	3.90	GFAF	57	AM63
8.80	130	157.09	11500	4.60	GF	57	AD2
10.0	113	136.16	11500	5.30	GFF	57	

n_2 [1/min]	M_2 [Nm]	i	Fr [N]	K	Frame size	Input Configuration
P_1=0.12kw						
7.20	158	190.76	7970	2.50	GFA 47 GFAF 47 GF 47 GFF 47	Y..63M1-4 AM63 AD1
7.90	146	175.38	8020	2.80		
9.20	125	150.06	8100	3.20		
11.0	108	130.07	8150	3.70		
11.0	107	128.51	5220	1.85	GFA 37 GFAF 37 GF 37 GFF 37	Y..63M1-4 AM63 AD1
12.0	98	117.88	5270	2.00		
14.0	83	100.36	5340	2.40		
16.0	72	86.53	5400	2.80		
17.0	67	80.65	5410	3.00		
9.80	117	140.74	4500	1.10	GFA 27 GFAF 27 GF 27 GFF 27	Y..63M1-4 AM63 AD1
11.0	107	129.09	4500	1.20		
13.0	91	109.9	4500	1.40		
15.0	79	94.76	4500	1.65		
16.0	73	88.32	4500	1.75		
18.0	64	77.21	4500	2.00		
19.0	60	72.37	4500	2.20		
22.0	53	63.86	4500	2.40		
24.0	47	56.62	4500	2.80		
28.0	42	50.19	4500	3.10		
30.0	39	46.78	4500	3.40		
34.0	34	40.89	4500	3.80		
36.0	32	38.33	4430	4.10		
41.0	28	33.83	4270	4.60		
47.0	24	29.56	4100	5.30	GFA 27 GFAF 27 GF 27 GFF 27	Y..63M1-4 AM63 AD2
51.0	23	27.18	4000	5.80		
59.0	19	23.25	3820	6.70		
68.0	17	20.15	3650	7.80		
73.0	16	18.84	3580	8.30		
85.0	14	16.28	3420	9.60		
100	12	13.84	3250	11.0		
112	10	12.35	3140	13.0	GFA 27 GFAF 27 GF 27 GFF 27	Y..63M1-4 AM63 AD2
131	8.8	10.55	2990	15.0		
140	8.2	9.88	2920	16.0		
147	7.8	9.4	2870	17.0		
170	6.7	8.13	2740	18.0		
200	5.7	6.91	2600	20.0		
224	5.1	6.17	2510	21.0		
262	4.4	5.27	2390	23.0		
280	4.1	4.93	2340	23.0		
332	3.5	4.16	2210	25.0		
P_1=0.18kw						
0.10	13600	12912	87200	0.90	GFA 127 GRF77 GFAF 127 GRF77 GF 127 GRF77 GFF 127 GRF77	Y..63M2-4 AM63 AD2
0.11	12100	11656	90000	1.00		
0.13	10700	10191	90000	1.10		
0.15	8940	8831	90000	1.35		
0.17	7740	7643	90000	1.55		
0.20	7130	6715	90000	1.70		
0.15	8440	8548	47700	0.90	GFA 107 GRF77 GFAF 107 GRF77 GF 107 GRF77 GFF 107 GRF77	Y..63M2-4 AM63 AD2
0.17	8130	7674	48600	0.95		
0.20	7070	6767	51400	1.10		
0.22	6080	5954	53800	1.25		
0.25	5290	5223	55700	1.45		
0.29	4850	4567	56600	1.60		

n_2 [1/min]	M_2 [Nm]	i	Fr [N]	K	Frame size	Input Configuration
P_1=0.18kw						
0.37	3670	3521	59100	2.10	GFA 107 GRF77 GFAF 107 GRF77 GF 107 GRF77 GFF 107 GRF77	Y..63M2-4 AM63 AD2
0.43	3250	3037	59900	2.40	GFA 107 GRF77 GFAF 107 GRF77 GF 107 GRF77 GFF 107 GRF77	Y..63M2-4 AM63 AD3
0.48	2950	2756	60500	2.60		
0.56	2540	2369	61200	3.00		
0.64	2210	2068	61800	3.50		
0.30	4800	4333	22800	0.90	GFA 97 GRF57 GFAF 97 GRF57 GF 97 GRF57 GFF 97 GRF57	Y..63M2-4 AM63 AD2
0.34	4420	3906	29500	0.95		
0.39	3800	3352	31300	1.15		
0.45	3210	2907	32800	1.35		
0.52	2890	2553	33600	1.50		
0.59	2540	2245	34300	1.70		
0.67	2210	1970	35000	1.95		
0.77	1950	1722	35500	2.20	GFA 97 GRF57 GFAF 97 GRF57 GF 97 GRF57 GFF 97 GRF57	Y..63M2-4 AM63 AD2
0.86	1730	1527	35900	2.50		
0.99	1420	1327	36400	3.00		
1.10	1330	1171	36500	3.20		
0.51	2920	2576	22300	1.00	GFA 87 GRF57 GFAF 87 GRF57 GF 87 GRF57 GFF 87 GRF57	Y..63M2-4 AM63 AD2
0.60	2490	2199	24800	1.20		
0.68	2160	1930	25900	1.40		
0.77	1930	1709	26600	1.55		
0.88	1690	1493	27300	1.75		
1.00	1390	1300	28100	2.10		
1.20	1250	1148	28400	2.40		
1.30	1080	1010	28800	2.80		
1.50	970	887	29000	3.10	GFA 87 GRF57 GFAF 87 GRF57 GF 87 GRF57 GFF 87 GRF57	Y..63M2-4 AM63 AD3
1.70	830	780	29300	3.60		
0.86	1770	1544	13500	0.85	GFA 77 GRF37 GFAF 77 GRF37 GF 77 GRF37 GFF 77 GRF37	Y..63M2-4 AM63 AD2
0.98	1550	1354	15300	0.95		
1.10	1380	1200	16500	1.10		
1.20	1210	1053	17400	1.25		
1.40	1030	910	18200	1.45		
1.60	880	810	18700	1.70		
1.90	780	710	19000	1.90		
2.20	690	615	19300	2.20		
1.50	940	858	8660	0.85	GFA 67 GRF37 GFAF 67 GRF37 GF 67 GRF37 GFF 67 GRF37	Y..63M2-4 AM63 AD2
1.80	820	755	10200	1.00		
2.10	700	641	11200	1.15		
2.30	645	572	11600	1.25		
2.60	555	509	12100	1.45		
3.00	480	437	12500	1.70		
3.40	430	384	12700	1.90		
2.60	575	500	12000	1.40	GFA 67 GRF37 GFAF 67 GRF37 GF 67 GRF37 GFF 67 GRF37	Y..63M2-4 AM63 AD2
2.90	525	454	12300	1.55		
3.40	450	392	12600	1.80		
4.00	380	333	12900	2.20		
4.40	335	297	13000	2.40		
5.10	295	261	13000	2.80		

n_2 [1/min]	M_2 [Nm]	i	Fr [N]	K	Frame size		Input Configuration
P_1=0.18kw							
5.60	260	238	13000	3.10	GFA	67 GRF37	Y..63M_2-4
6.60	215	200	13000	3.70	GFAF	67 GRF37	AM63
					GF	67 GRF37	AD2
					GFF	67 GRF37	
2.40	635	558	7570	0.95			
2.60	570	506	9420	1.05			
2.90	495	452	9930	1.20			
3.40	425	386	10400	1.40			
3.90	370	338	10700	1.60	GFA	57 GRF37	Y..63M_2-4
3.10	500	426	9910	1.20	GFAF	57 GRF37	AM63
3.50	445	382	10300	1.35	GF	57 GRF37	AD2
4.00	380	330	10700	1.55	GFF	57 GRF37	
4.40	340	298	10900	1.75			
5.00	300	262	11100	2.00			
5.80	255	226	11400	2.30			
6.60	220	200	11500	2.70			
3.60	410	370	5210	0.95			
4.10	375	324	6250	1.05			
4.60	325	288	6810	1.20			
5.30	275	249	7250	1.45	GFA	47 GRF17	Y..63M_2-4
4.00	385	334	6100	1.05	GFAF	47 GRF17	AM63
4.50	335	295	6680	1.20	GF	47 GRF17	-
5.20	285	253	7190	1.40	GFF	47 GRF17	
6.10	250	217	7430	1.55			
7.00	220	190	7650	1.80			
7.40	205	178	7740	1.95			
7.10	215	186	4060	0.95	GFA	37 GRF17	Y..63M_2-4
7.90	194	167	4380	1.05	GFAF	37 GRF17	AM63
9.10	171	145	4660	1.15	GF	37 GRF17	-
10.0	151	129	4870	1.30	GFF	37 GRF17	
9.30	166	142	4500	0.80	GFA	27 GRF17	Y..63M_2-4
11.0	144	124	4500	0.90	GFAF	27 GRF17	AM63
12.0	126	109	4500	1.05	GF	27 GRF17	-
14.0	110	96	4500	1.20	GFF	27 GRF17	
3.10	555	281.71	19600	2.70	GFA	77	Y..71 M_1-6
3.30	515	262.93	19700	2.90	GFAF	77	AM71
3.80	445	225.79	19800	3.40	GF	77	AD2
					GFF	77	
3.80	450	228.99	12600	1.80	GFA	67	Y..71 M_1-6
4.40	385	195.39	12900	2.10	GFAF	67	AM71
5.10	335	170.85	13000	2.40	GF	67	AD2
					GFF	67	
5.80	295	228.99	13000	2.80	GFA	67	Y..63M_2-4
6.80	250	195.39	13000	3.20	GFAF	67	AM63
7.70	220	170.85	13000	3.70	GF	67	AD2
					GFF	67	
4.40	390	199.7	10600	1.50			
4.70	360	183.6	10800	1.65	GFA	57	Y..71 M_1-6
5.50	310	157.09	11100	1.95	GFAF	57	AM71
6.40	265	136.16	11300	2.20	GF	57	AD2
6.80	250	127.27	11400	2.40	GFF	57	
7.90	215	110.01	11500	2.80			

n_2 [1/min]	M_2 [Nm]	i	Fr [N]	K	Frame size		Input Configuration
P_1=0.18kw							
6.60	260	199.7	11300	2.30	GFA	57	
7.20	235	183.6	11500	2.50	GFAF	57	Y..63M_2-4
8.40	200	157.09	11500	2.90	GF	57	AM63
9.70	177	136.16	11500	3.40	GFF	57	AD2
10.0	166	127.27	11500	3.60			
4.60	375	190.76	6240	1.05	GFA	47	
5.00	345	175.38	6600	1.15	GFAF	47	Y..71M_1-6
5.80	295	150.06	7090	1.35	GF	47	AM71
6.70	255	130.07	7410	1.55	GFF	47	AD1
7.20	240	121.57	7530	1.65			
6.90	245	190.76	7470	1.60	GFA	47	
7.50	225	175.38	7600	1.75	GFAF	47	Y..63M_2-4
8.80	195	150.06	7800	2.00	GF	47	AM63
10.0	169	130.07	7920	2.40	GFF	47	AD1
11.0	158	121.57	7970	2.50			
7.40	230	117.88	3750	0.85	GFA	37	
8.70	198	100.36	4320	1.00	GFAF	37	Y..71M_1-6
10.0	171	86.53	4660	1.15	GF	37	AM71
11.0	159	80.65	4790	1.25	GFF	37	AD1
12.0	139	70.5	4970	1.45			
10.0	167	128.51	4700	1.20			
11.0	154	117.88	4840	1.30			
13.0	131	100.36	5040	1.55	GFA	37	
15.0	113	86.53	5180	1.75	GFAF	37	Y..63M_2-4
16.0	105	80.65	5230	1.90	GF	37	AM63
19.0	92	70.5	5300	2.20	GFF	37	AD1
20.0	86	66.09	5330	2.30			
23.0	76	58.32	5380	2.60			
12.0	143	109.9	4500	0.90			
14.0	123	94.76	4500	1.05			
15.0	115	88.32	4500	1.15			
17.0	100	77.21	4500	1.30			
18.0	94	72.37	4500	1.40	GFA	27	
21.0	83	63.86	4500	1.55	GFAF	27	Y..63M_2-4
23.0	74	56.62	4500	1.75	GF	27	AM63
26.0	65	50.19	4500	2.00	GFF	27	AD1
28.0	61	46.78	4500	2.10			
32.0	53	40.89	4410	2.40			
34.0	50	38.33	4340	2.60			
39.0	44	33.83	4200	3.00			
45.0	38.0	29.56	4040	3.40			
49.0	35.0	27.18	3950	3.70			
57.0	30.0	23.25	3780	4.30			
65.0	26.0	20.15	3630	5.00			
70.0	24.0	18.84	3560	5.30			
81.0	21.0	16.28	3410	6.10	GFA	27	
95.0	18.0	13.84	3240	7.20	GFAF	27	Y..63M_2-4
107	16.0	12.35	3140	8.10	GF	27	AM63
125	14.0	10.55	2990	9.50	GFF	27	AD2
134	13.0	9.88	2930	10.0			
140	12.0	9.40	2870	11.0			
162	11.0	8.13	2750	12.0			
191	9.00	6.91	2610	13.0			
214	8.00	6.17	2520	14.0			

n_2 [1/min]	M_2 [Nm]	i	Fr [N]	K	Frame size		Input Configuration
P_1=0.18kw							
251	6.90	5.27	2400	14.0	GFA	27	Y..63M_2-4
268	6.40	4.93	2350	15.0	GFAF	27	AM63
318	5.40	4.16	2230	16.0	GF	27	AD2
					GFF	27	
335	5.10	8.13	2190	24.0			
394	4.40	6.91	2080	26.0	GFA	27	Y..63 M_1-2
441	3.90	6.17	2000	28.0	GFAF	27	AM63
516	3.30	5.27	1910	30.0	GF	27	AD2
551	3.10	4.93	1870	31.0	GFF	27	
655	2.60	4.16	1770	33.0			
P_1=0.25kw							
0.15	13300	8831	87900	0.90			
0.17	11500	7643	90000	1.05	GFA	127 GRF77	Y..71M_1-4
0.19	10400	6715	90000	1.15	GFAF	127 GRF77	AM71
0.22	9230	5925	90000	1.30	GF	127 GRF77	AD2
0.25	7940	5153	90000	1.50	GFF	127 GRF77	
0.29	6890	4533	90000	1.75			
0.22	9050	5954	46000	0.85	GFA	107 GRF77	Y..71M_1-4
0.25	7890	5223	49300	0.95	GFAF	107 GRF77	AM71
0.28	7120	4567	51300	1.10	GF	107 GRF77	AD2
0.37	5430	3521	55300	1.40	GFF	107 GRF77	
0.43	4780	3037	56800	1.60			
0.47	4340	2756	57700	1.75	GFA	107 GRF77	Y..71M1-4
0.55	3730	2369	59000	2.10	GFAF	107 GRF77	AM71
0.63	3250	2068	59900	2.40	GF	107 GRF77	AD3
0.81	2490	1597	61300	3.10	GFF	107 GRF77	
0.93	2150	1401	61900	3.60			
0.45	4670	2907	27500	0.90			
0.51	4180	2553	30300	1.05			
0.58	3670	2245	31600	1.15	GFA	97 GRF57	Y..71M_1-4
0.66	3200	1970	32800	1.35	GFAF	97 GRF57	AM71
0.85	2500	1527	34400	1.70	GF	97 GRF57	AD2
0.98	2090	1327	35200	2.00	GFF	97 GRF57	
1.10	1910	1171	35500	2.20			
1.30	1670	1022	36000	2.60			
0.75	2820	1722	33700	1.50	GFA	97 GRF57	Y..71M_1-4
					GFAF	97 GRF57	AM71
					GF	97 GRF57	AD3
					GFF	97 GRF57	
0.67	3130	1930	13500	0.95			
0.76	2790	1709	23700	1.05	GFA	87 GRF57	Y..71M_1-4
0.87	2440	1493	25000	1.25	GFAF	87 GRF57	AM71
1.00	2050	1300	26300	1.45	GF	87 GRF57	AD2
1.10	1830	1148	26900	1.65	GFF	87 GRF57	
1.30	1590	1010	27600	1.90			
1.50	1410	887	28000	2.10	GFA	87 GRF57	Y..71M_1-4
1.70	1230	780	28500	2.40	GFAF	87 GRF57	AM71
1.90	1040	674	28900	2.90	GF	87 GRF57	AD3
					GFF	87 GRF57	

n_2 [1/min]	M_2 [Nm]	i	Fr [N]	K	Frame size		Input Configuration
P_1=0.25kw							
1.20	1740	1053	13900	0.85	GFA	77 GRF37	Y..71M_1-4
1.40	1490	910	15700	1.00	GFAF	77 GRF37	AM71
1.60	1290	810	16900	1.15	GF	77 GRF37	AD2
1.80	1130	710	17700	1.30	GFF	77 GRF37	
2.10	1000	615	18300	1.50	GFA	77 GRF37	Y..71M_1-4
2.40	870	538	18700	1.70	GFAF	77 GRF37	AM71
2.70	775	480	19000	1.95	GF	77 GRF37	AD2
3.20	660	413	19400	2.30	GFF	77 GRF37	
2.30	930	572	9150	0.90			
2.60	810	509	10400	1.00			
3.00	700	437	11200	1.15			
2.60	830	500	10200	1.00	GFA	67 GRF37	Y..71M_1-4
2.90	755	454	10800	1.10	GFAF	67 GRF37	AM71
3.30	650	392	11600	1.25	GF	67 GRF37	AD2
3.90	550	333	12200	1.50	GFF	67 GRF37	
4.40	485	297	12500	1.70			
5.00	425	261	12700	1.90			
5.50	385	238	12900	2.10			
3.40	620	386	8830	0.95			
3.80	540	338	9640	1.10			
5.10	405	255	10500	1.45			
3.40	635	382	7390	0.95	GFA	57 GRF37	Y..71M_1-4
3.90	550	330	9570	1.10	GFAF	57 GRF37	AM71
4.40	495	298	9950	1.20	GF	57 GRF37	AD2
5.00	435	262	10300	1.35	GFF	57 GRF37	
5.80	370	226	10700	1.60			
6.50	320	200	11000	1.85			
7.60	275	170	11300	2.20			
5.20	400	249	5880	1.00			
6.00	355	218	6470	1.10			
6.70	315	193	6920	1.25			
7.40	285	175	7180	1.40	GFA	47 GRF17	Y..71M1-4
5.10	410	253	4980	0.95	GFAF	47 GRF17	AM71
6.00	365	217	6380	1.10	GF	47 GRF17	-
6.80	315	190	6900	1.25	GFF	47 GRF17	
7.30	295	178	7090	1.35			
8.70	245	149	7480	1.60			
9.90	215	131	7670	1.85			
8.90	245	145	3420	0.80			
10.0	215	129	4040	0.90	GFA	37 GRF17	Y..71M1-4
11.0	198	118	4320	1.00	GFAF	37 GRF17	AM71
13.0	164	98	4740	1.20	GF	37 GRF17	-
15.0	144	87	4940	1.40	GFF	37 GRF17	
3.20	750	281.71	19100	2.00			
3.40	700	262.93	19300	2.10	GFA	77	Y..71 M_2-6
4.00	600	225.79	19500	2.50	GFAF	77	AM71
4.50	525	198.31	19600	2.80	GF	77	AD2
4.80	500	188.40	19700	3.00	GFF	77	
3.90	610	228.99	11800	1.35			
4.60	520	195.39	12300	1.55	GFA	67	Y..71 M_2-6
5.20	455	170.85	12600	1.80	GFAF	67	AM71
5.50	430	162.31	12700	1.90	GF	67	AD2
6.30	375	142.40	12900	2.20	GFF	67	

n_2 [1/min]	M_2 [Nm]	i	Fr [N]	K	Frame size		Input Configuration
P_1=0.25kw							
5.70	420	228.99	12700	1.95	GFA	67	Y..71 M_1-4
6.60	355	195.39	13000	2.30	GFAF	67	AM71
7.60	310	170.85	13000	2.60	GF	67	AD2
8.00	295	162.31	13000	2.80	GFF	67	
9.10	260	142.40	13000	3.10			
4.50	530	199.70	9700	1.15	GFA	57	Y..71 M_2-6
4.90	485	183.60	9990	1.25	GFAF	57	AM71
5.70	415	157.09	10500	1.45	GF	57	AD2
6.60	360	136.16	10800	1.65	GFF	57	
7.00	335	127.27	10900	1.75			
8.10	290	110.01	11200	2.00			
6.50	365	199.70	10800	1.65	GFA	57	Y..71M_1-4
7.10	335	183.60	10900	1.80	GFAF	57	AM71
8.30	285	157.09	11200	2.10	GF	57	AD2
9.60	250	136.16	11400	2.40	GFF	57	
10.0	230	127.27	11500	2.60			
12.0	200	110.01	11500	3.00			
6.00	400	150.06	5920	1.00	GFA	47	Y..71M_2-6
6.90	345	130.07	6590	1.15	GFAF	47	AM71
7.40	320	121.57	6830	1.25	GF	47	AD1
8.50	280	105.09	7230	1.45	GFF	47	
6.80	350	190.76	6550	1.15	GFA	47	Y..71M_1-4
7.40	320	175.38	6850	1.25	GFAF	47	AM71
8.70	275	150.06	7270	1.45	GF	47	AD1
10.0	235	130.07	7540	1.65	GFF	47	
11.0	220	121.57	7640	1.80			
12.0	193	105.09	7810	2.10			
15.0	164	89.29	7950	2.40			
10.0	235	128.51	3690	0.85	GFA	37	Y..71M_1-4
11.0	215	117.88	4040	0.90	GFAF	37	AM71
13.0	184	100.36	4500	1.10	GF	37	AD1
15.0	159	86.53	4790	1.25	GFF	37	
16.0	148	80.65	4900	1.35			
18.0	130	70.50	5060	1.55			
20.0	121	66.09	5120	1.65			
22.0	107	58.32	5210	1.85			
24.0	100	54.54	5260	2.00			
25.0	95	51.70	5280	2.10			
28.0	86	47.02	5330	2.30	GFA	37	Y..71M_1-4
30.0	80	43.83	5360	2.50	GFAF	37	AM71
34.0	70	38.31	5400	2.80	GF	37	AD2
36.0	66	35.91	5420	3.00	GFF	37	
41.0	58	31.69	5440	3.40			
17.0	142	77.21	4500	0.90	GFA	27	Y..71M_1-4
18.0	133	72.37	4500	1.00	GFAF	27	AM71
20.0	117	63.86	4500	1.10	GF	27	AD1
23.0	104	56.62	4500	1.25	GFF	27	
26.0	92	50.19	4440	1.40			
28.0	86	46.78	4370	1.50			
32.0	75	40.89	4240	1.75			
34.0	70	38.33	4180	1.85			
38.0	62	33.83	4060	2.10			

n_2 [1/min]	M_2 [Nm]	i	Fr [N]	K	Frame size		Input Configuration
P_1=0.25kw							
44.0	54	29.56	3920	2.40	GFA	27	Y..71M_1-4
48.0	50	27.18	3840	2.60	GFAF	27	AM71
56.0	43	23.25	3690	3.00	GF	27	AD2
64.0	37	20.15	3550	3.50	GFF	27	
69.0	35	18.84	3480	3.80			
80.0	30	16.28	3350	4.40			
94.0	25	13.84	3200	5.10			
105	23	12.35	3090	5.70			
123	19	10.55	2950	6.70			
132	18	9.88	2900	7.20			
138	17	9.4	2840	7.50			
160	15	8.13	2720	8.30			
188	13	6.91	2590	9.00			
211	11	6.17	2500	9.60			
247	9.7	5.27	2380	10.0			
264	9.1	4.93	2340	11.0			
313	7.6	4.16	2220	11.0			
327	7.3	8.13	2180	17.0	GFA	27	Y..63 M_2-2
385	6.2	6.91	2080	18.0	GFAF	27	AM63
431	5.5	6.17	2000	20.0	GF	27	AD2
505	4.7	5.27	1910	21.0	GFF	27	
539	4.4	4.93	1870	22.0			
640	3.7	4.16	1770	24.0			
P_1=0.37kw							
0.21	14900	6715	84600	0.80	GFA	127 GRF77	Y..71M_2-4
0.23	13200	5925	88100	0.90	GFAF	127 GRF77	AM71
0.27	11400	5153	90000	1.05	GF	127 GRF77	AD2
0.30	9930	4533	90000	1.20	GFF	127 GRF77	
0.35	8690	3926	90000	1.40			
0.40	7560	3454	90000	1.60			
0.46	6610	3031	90000	1.80			
0.45	6850	3037	52000	1.10	GFA	107 GRF77	Y..71M_2-4
0.50	6210	2756	53500	1.25	GFAF	107 GRF77	AM71
0.58	5340	2369	55500	1.45	GF	107 GRF77	AD3
0.67	4660	2068	57000	1.65	GFF	107 GRF77	
0.86	3570	1597	59300	2.20			
0.70	4540	1970	29200	0.95	GFA	97 GRF57	Y..71M_2-4
0.90	3540	1527	32000	1.20	GFAF	97 GRF57	AM71
1.00	2990	1327	33300	1.45	GF	97 GRF57	AD2
1.20	2710	1171	33900	1.60	GFF	97 GRF57	
1.40	2370	1022	34700	1.80			
1.50	2000	898	35400	2.10	GFA	97 GRF57	Y..71M_2-4
0.80	3990	1722	30800	1.10	GFAF	97 GRF57	AM71
					GF	97 GRF57	AD3
					GFF	97 GRF57	
1.10	2930	1300	22000	1.00	GFA	87 GRF57	Y..71M_2-4
1.20	2610	1148	24400	1.15	GFAF	87 GRF57	AM71
1.40	2280	1010	25600	1.30	GF	87 GRF57	AD2
					GFF	87 GRF57	
1.60	2010	887	26400	1.50	GFA	87 GRF57	Y..71M_2-4
1.80	1760	780	27100	1.70	GFAF	87 GRF57	AM71
2.00	1500	674	27800	2.00	GF	87 GRF57	AD3
					GFF	87 GRF57	

n_2 [1/min]	M_2 [Nm]	i	Fr [N]	K	Frame size		Input Configuration
P_1=0.37kw							
2.30	1370	609	28100	2.20	GFA	87 GRF57	Y..71M_2-4
2.70	1150	515	28600	2.60	GFAF	87 GRF57	AM71
3.00	1020	452	28900	2.90	GF	87 GRF57	AD3
					GFF	87 GRF57	
1.70	1840	810	11300	0.80			
1.90	1620	710	14900	0.95			
2.20	1420	615	16200	1.05	GFA	77 GRF37	Y..71M_2-4
2.60	1240	538	17200	1.20	GFAF	77 GRF37	AM71
2.90	1100	480	17900	1.35	GF	77 GRF37	AD2
3.40	940	413	18500	1.60	GFF	77 GRF37	
3.80	840	367	18900	1.80			
4.30	750	323	19100	2.00			
3.60	880	384	9670	0.95	GFA	67 GRF37	Y..71M_2-4
4.10	785	338	10600	1.05	GFAF	67 GRF37	AM71
4.50	700	305	11200	1.15	GF	67 GRF37	AD2
5.40	590	257	11900	1.40	GFF	67 GRF37	
6.00	520	231	12300	1.55			
5.40	580	255	9330	1.05			
6.90	455	201	10200	1.30			
7.60	410	181	10500	1.45			
5.30	615	262	9070	0.95	GFA	57 GRF37	Y..71M_2-4
6.10	525	226	9740	1.15	GFAF	57 GRF37	AM71
6.90	460	200	10200	1.30	GF	57 GRF37	AD2
8.10	390	170	10600	1.50	GFF	57 GRF37	
9.00	345	152	10900	1.70			
10.0	305	134	11100	1.95			
7.90	400	175	5860	1.00	GFA	47 GRF17	Y..71M_2-4
9.40	340	147	6660	1.15	GFAF	47 GRF17	AM71
11.0	300	130	7050	1.35	GF	47 GRF17	-
					GFF	47 GRF17	
3.30	1050	270.68	28900	2.80	GFA	87	Y..80M_1-6
3.50	990	255.37	29000	3.00	GFAF	87	AM80
4.00	890	228.93	29200	3.40	GF	87	AD2
					GFF	87	
4.00	880	225.79	18700	1.70	GFA	77	Y..80 M_1-6
4.60	770	198.31	19100	1.95	GFAF	77	AM80
4.80	735	188.40	19200	2.00	GF	77	AD2
5.40	645	166.47	19400	2.30	GFF	77	
6.40	555	142.27	19600	2.70			
4.90	720	281.71	19200	2.10	GFA	77	Y..71 M_2-4
5.20	670	262.93	19300	2.20	GFAF	77	AM71
6.10	575	225.79	19500	2.60	GF	77	AD2
7.00	505	198.31	19700	3.00	GFF	77	
4.60	760	195.39	10800	1.05	GFA	67	Y..80M_1-6
5.30	665	170.85	11500	1.25	GFAF	67	AM80
5.60	630	162.31	11700	1.30	GF	67	AD2
6.40	555	142.40	12100	1.45	GFF	67	
7.50	470	120.79	12500	1.75			

n_2 [1/min]	M_2 [Nm]	i	Fr [N]	K	Frame size		Input Configuration
P_1=0.37kw							
6.00	585	228.99	12000	1.40			
7.10	500	195.39	12400	1.65	GFA	67	Y..71M_2-4
8.10	435	170.85	12700	1.85	GFAF	67	AM71
8.50	415	162.31	12800	1.95	GF	67	AD2
9.70	360	142.40	12900	2.20	GFF	67	
11.0	305	120.79	13000	2.60			
5.80	610	157.09	9100	1.00	GFA	57	Y..80M_1-6
6.60	530	136.16	9700	1.15	GFAF	57	AM80
7.10	495	127.27	9940	1.20	GF	57	AD2
8.20	425	110.01	10400	1.40	GFF	57	
6.90	510	199.70	9850	1.15			
7.50	470	183.60	10100	1.30			
8.80	400	157.09	10600	1.50	GFA	57	Y..71M_2-4
10.0	345	136.16	10900	1.70	GFAF	57	AM71
11.0	325	127.27	11000	1.85	GF	57	AD2
13.0	280	110.01	11200	2.10	GFF	57	
15.0	235	93.47	11500	2.50			
17.0	210	83.46	11500	2.80			
9.20	380	150.06	6140	1.05			
11.0	330	130.07	6740	1.20	GFA	47	Y..71M_2-4
13.0	265	105.09	7320	1.50	GFAF	47	AM71
15.0	225	89.29	7600	1.75	GF	47	AD1
17.0	200	79.72	7750	1.95	GFF	47	
20.0	174	68.09	7900	2.30			
21.0	167	65.36	7930	2.40	GFA	47	Y..71M_2-4
					GFAF	47	AM71
					GF	47	AD2
					GFF	47	
16.0	220	86.53	3960	0.90			
17.0	205	80.65	4200	0.95	GFA	37	Y..71M_2-4
20.0	180	70.50	4550	1.10	GFAF	37	AM71
21.0	169	66.09	4680	1.20	GF	37	AD1
24.0	149	58.32	4880	1.35	GFF	37	
25.0	140	54.54	4970	1.45			
27.0	132	51.70	5030	1.50			
29.0	120	47.02	5120	1.65			
31.0	112	43.83	5180	1.80	GFA	37	Y..71M_2-4
36.0	98	38.31	5270	2.00	GFAF	37	AM71
38.0	92	35.91	5300	2.20	GF	37	AD2
44.0	81	31.69	5300	2.50	GFF	37	
49.0	72	28.09	5140	2.80			
58.0	61	23.88	4930	3.30			
24.0	145	56.62	4080	0.90			
28.0	128	50.19	4010	1.00	GFA	27	Y..71M_2-4
30.0	120	46.78	3970	1.10	GFAF	27	AM71
34.0	105	40.89	3880	1.25	GF	27	AD1
36.0	98	38.33	3840	1.35	GFF	27	
41.0	87	33.83	3750	1.50			
47.0	76	29.56	3650	1.70	GFA	27	Y..71M_2-4
51.0	70	27.18	3580	1.85	GFAF	27	AM71
59.0	60	23.25	3460	2.20	GF	27	AD2
68.0	52	20.15	3340	2.50	GFF	27	

n_2 [1/min]	M_2 [Nm]	i	Fr [N]	K	Frame size	Input Configuration
P_1=0.37kw						
73.0	48	18.84	3290	2.70	GFA 27 GFAF 27 GF 27 GFF 27	Y..71M_1-4 AM71 AD2
85.0	42	16.28	3170	3.10		
100	35	13.84	3040	3.70		
112	32	12.35	2950	4.10		
131	27	10.55	2820	4.80		
140	25	9.88	2770	5.10		
147	24	9.4	2710	5.40		
170	21	8.13	2600	5.90		
200	18	6.91	2490	6.40		
224	16	6.17	2410	6.90		
262	14	5.27	2300	7.40		
280	13	4.93	2250	7.60		
332	11	4.16	2140	8.20		
326	11	8.13	2150	11.0	GFA 27 GFAF 27 GF 27 GFF 27	Y..71M_1-2 AM71 AD2
384	9.2	6.91	2050	12.0		
430	8.2	6.17	1980	13.0		
503	7	5.27	1890	14.0		
537	6.6	4.93	1850	15.0		
638	5.5	4.16	1750	16.0		
P_1=0.55kw						
0.22	20100	6295	93100	0.90	GFA 157 GRF97 GFAF 157 GRF97 GF 157 GRF97 GFF 157 GRF97	Y..80M_1-4 AM80 AD3
0.26	16800	5404	103500	1.05		
0.50	8660	2780	119000	2.10		
0.57	7660	2427	120000	2.40	GFA 157 GRF97 GFAF 157 GRF97 GF 157 GRF97 GFF 157 GRF97	Y..80M_1-4 AM80 AD5
0.82	5440	1674	120000	3.30	GFA 157 GRF97 GFAF 157 GRF97 GF 157 GRF97 GFF 157 GRF97	Y..80M_1-4 AM80 AD4
1.10	4200	1308	120000	4.30	GFA 157 GRF97 GFAF 157 GRF97 GF 157 GRF97 GFF 157 GRF97	Y..80M_1-4 AM80 AD5
1.20	3680	1169	120000	4.90		
0.35	13200	3926	88100	0.90	GFA 127 GRF77 GFAF 127 GRF77 GF 127 GRF77 GFF 127 GRF77	Y..80M_1-4 AM80 AD2
0.40	11500	3454	90000	1.05		
0.46	10100	3031	90000	1.20		
0.58	8120	2369	48600	0.95	GFA 107 GRF77 GFAF 107 GRF77 GF 107 GRF77 GFF 107 GRF77	Y..80M_1-4 AM80 AD3
0.67	7090	2068	51400	1.10		
0.76	6090	1826	53800	1.25		
0.86	5450	1597	55300	1.40		
0.98	4750	1401	56900	1.60		
1.10	4140	1243	58100	1.85		
1.30	3710	1087	59000	2.10		
1.40	3170	950	60100	2.40		
1.70	2750	834	60800	2.80		

n_2 [1/min]	M_2 [Nm]	i	Fr [N]	K	Frame size	Input Configuration
P_1=0.55kw						
2.20	2140	640	61900	3.60	GFA 107 GRF77 GFAF 107 GRF77 GF 107 GRF77 GFF 107 GRF77	Y..80M_1-4 AM80 AD4
1.00	4550	1327	29100	0.95	GFA 97 GRF57 GFAF 97 GRF57 GF 97 GRF57 GFF 97 GRF57	Y..80M_1-4 AM80 AD2
1.20	4080	1171	30500	1.05		
1.40	3570	1022	31900	1.20		
1.50	3050	898	33200	1.40	GFA 97 GRF57 GFAF 97 GRF57 GF 97 GRF57 GFF 97 GRF57	Y..80M_1-4 AM80 AD3
1.80	2700	784	34000	1.60		
2.00	2340	690	34700	1.85		
2.30	2070	605	35300	2.10		
2.60	1790	529	35800	2.40		
3.00	1580	467	36100	2.70		
3.40	1360	406	36500	3.20		
3.80	1220	363	36700	3.50		
1.60	3050	887	17400	1.00	GFA 87 GRF57 GFAF 87 GRF57 GF 87 GRF57 GFF 87 GRF57	Y..80M_1-4 AM80 AD3
1.80	2670	780	24200	1.10		
2.00	2290	674	25500	1.30		
2.30	2080	609	26200	1.45		
2.70	1760	515	27100	1.70		
3.00	1550	452	27700	1.95		
4.00	1160	345	28600	2.60		
2.90	1660	480	14500	0.90	GFA 77 GRF37 GFAF 77 GRF37 GF 77 GRF37 GFF 77 GRF37	Y..80M_1-4 AM80 AD2
3.40	1420	413	16200	1.05		
3.80	1270	367	17100	1.20		
4.30	1120	323	17800	1.35		
5.40	890	257	9610	0.90	GFA 67 GRF37 GFAF 67 GRF37 GF 67 GRF37 GFF 67 GRF37	Y..80M_1-4 AM80 AD2
6.00	790	231	10500	1.05		
6.70	705	205	11200	1.15		
7.90	600	175	11900	1.35		
3.40	1550	270.68	27700	1.95	GFA 87 GFAF 87 GF 87 GFF 87	Y..80M_2-6 AM80 AD2
3.60	1460	255.37	27900	2.00		
4.00	1310	228.93	28300	2.30		
4.60	1130	197.20	28700	2.60		
5.10	1030	179.97	28900	2.90		
4.00	1290	225.79	17000	1.15	GFA 77 GFAF 77 GF 77 GFF 77	Y..80M_2-6 AM80 AD2
4.60	1130	198.31	17700	1.30		
4.90	1080	188.40	18000	1.40		
5.50	950	166.47	18500	1.55	GFA 77 GFAF 77 GF 77 GFF 77	Y..80M_2-6 AM80 AD2
6.40	810	142.27	18900	1.85		
7.00	745	130.42	19100	2.00		
6.10	850	225.79	18800	1.75	GFA 77 GFAF 77 GF 77 GFF 77	Y..80M_1-4 AM80 AD2
7.00	750	198.31	19100	2.00		
7.30	715	188.4	19200	2.10		
8.30	630	166.47	19400	2.40		
9.70	540	142.27	19600	2.80		
11.00	495	130.42	19700	3.00		
12.00	435	114.45	19800	3.40		
13.00	410	108.46	19800	3.60		
15.00	360	94.93	19900	4.20		
7.10	740	195.39	10900	1.10	GFA 67 GFAF 67 GF 67 GFF 67	Y..80M_1-4 AM80 AD2
8.10	650	170.85	11600	1.25		
8.50	615	162.31	11800	1.35		
9.70	540	142.4	12200	1.50		
11.0	455	120.79	12600	1.80		
13.0	415	109.04	12800	2.00		

n_2 [1/min]	M_2 [Nm]	i	Fr [N]	K	Frame size	Input Configuration
P_1=0.55kw						
14.0	365	95.94	12900	2.20	GFA 67 GFAF 67 GF 67 GFF 67	Y..80M$_1$-4 AM80 AD2
15.0	340	90.59	13000	2.40		
17.0	300	79.76	13000	2.70		
8.80	595	157.09	9220	1.00	GFA 57 GFAF 57 GF 57 GFF 57	Y..80M$_1$-4 AM80 AD2
10.0	515	136.16	9800	1.15		
11.0	480	127.27	10000	1.25		
13.0	415	110.01	10500	1.45		
15.0	355	93.47	10800	1.70		
17.0	315	83.46	11000	1.90		
19.0	275	72.98	11300	2.20		
20.0	255	68.22	11400	2.30		
23.0	220	58.97	11500	2.70		
13.0	395	105.09	5920	1.00	GFA 47 GFAF 47 GF 47 GFF 47	Y..80M$_1$-4 AM80 AD1
15.0	335	89.29	6670	1.20		
17.0	300	79.72	7030	1.30		
20.0	255	68.09	7390	1.55		
21.0	245	65.36	7470	1.60	GFA 47 GFAF 47 GF 47 GFF 47	Y..80M$_1$-4 AM80 AD2
24.0	215	56.49	7690	1.85		
29.0	183	48.00*	7860	2.20		
32.0	163	42.86	7950	2.40		
24.0	220	58.32	3950	0.90	GFA 37 GFAF 37 GF 37 GFF 37	Y..80M$_1$-4 AM80 AD1
25.0	205	54.54	4180	0.95		
27.0	197	51.70	4340	1.00		
29.0	179	47.02	4570	1.10	GFA 37 GFAF 37 GF 37 GFF 37	Y..80M$_1$-4 AM80 AD2
31.0	167	43.83	4710	1.20		
36.0	146	38.31	4920	1.35		
38.0	137	35.91	5000	1.45		
44.0	121	31.69	4980	1.65		
49.0	107	28.09	4860	1.85		
58.0	91	23.88	4680	2.20		
58.0	90	23.63	4670	2.20	GFA 37 GFAF 37 GF 37 GFF 37	Y..80M$_1$-4 AM80 AD2
67.0	78	20.57	4520	2.60		
72.0	73	19.27	4450	2.70		
81.0	65	17.03	4320	3.10		
96.0	54	14.33	4130	3.70		
36.0	144	77.21	3410	0.90	GFA 27 GFAF 27 GF 27 GFF 27	Y..71M$_2$-2 AM71 AD1
39.0	135	72.37	3390	0.95		
44.0	119	63.86	3350	1.10		
50.0	106	56.62	3290	1.25		
56.0	94	50.19	3230	1.40		
59.0	88	23.25	3200	1.45	GFA 27 GFAF 27 GF 27 GFF 27	Y..80M$_1$-4 AM80 AD2
68.0	77	20.15	3120	1.70		
73.0	72	18.84	3080	1.80		
85.0	62	16.28	2990	2.10		
100	53	13.84	2890	2.50		
112	47	12.35	2810	2.80		
131	40	10.55	2710	3.20		
140	38	9.88	2660	3.50		
147	36	9.40	2600	3.60		
170	31	8.13	2500	4.00		

n_2 [1/min]	M_2 [Nm]	i	Fr [N]	K	Frame size	Input Configuration
P_1=0.55kw						
200	26	6.91	2400	4.30	GFA 27 GFAF 27 GF 27 GFF 27	Y..80M$_1$-4 AM80 AD2
224	24	6.17	2330	4.60		
262	20	5.27	2230	5.00		
280	19	4.93	2190	5.10		
332	16	4.16	2090	5.50		
346	15	8.13	2070	8.10	GFA 27 GFAF 27 GF 27 GFF 27	Y..71M$_2$-2 AM71 AD2
407	13	6.91	1970	8.80		
456	12	6.17	1910	9.50		
533	9.8	5.27	1820	10.0		
570	9.2	4.93	1790	10.0		
676	7.8	4.16	1700	11.0		
P_1=0.75kw						
0.52	11700	2780	114600	1.55	GFA 157 GRF97 GFAF 157 GRF97 GF 157 GRF97 GFF 157 GRF97	Y..80M$_2$-4 AM80 AD3
0.86	7310	1674	120000	2.50	GFA 157 GRF97 GFAF 157 GRF97 GF 157 GRF97 GFF 157 GRF97	Y..80M$_2$-4 AM80 AD4
0.59	10300	2427	116800	1.75	GFA 157 GRF97 GFAF 157 GRF97 GF 157 GRF97 GFF 157 GRF97	Y..80M$_2$-4 AM80 AD5
1.10	5640	1308	120000	3.20		
1.20	4980	1169	120000	3.60		
0.47	13400	3031	87600	0.90	GFA 127 GRF77 GFAF 127 GRF77 GF 127 GRF77 GFF 127 GRF77	Y..80M$_2$-4 AM80 AD2
0.54	12100	2672	90000	1.00	GFA 127 GRF77 GFAF 127 GRF77 GF 127 GRF77 GFF 127 GRF77	Y..80M$_2$-4 AM80 AD3
0.61	10600	2357	90000	1.15		
0.70	9150	2038	90000	1.30		
0.80	7960	1784	90000	1.50		
0.89	7150	1606	90000	1.70		
0.79	8120	1826	48600	0.95	GFA 107 GRF77 GFAF 107 GRF77 GF 107 GRF77 GFF 107 GRF77	Y..80M$_2$-4 AM80 AD3
0.90	7220	1597	51000	1.05		
1.00	6310	1401	53300	1.20		
1.20	5530	1243	55100	1.40		
1.30	4920	1087	56500	1.55		
1.50	4220	950	58000	1.80		
1.70	3680	834	59100	2.10		
2.20	2860	640	60600	2.70	GFA 107 GRF77 GFAF 107 GRF77 GF 107 GRF77 GFF 107 GRF77	Y..80M$_2$-4 AM80 AD4
3.30	1940	436	62300	3.90		
1.40	4710	1022	26300	0.90	GFA 97 GRF57 GFAF 97 GRF57 GF 97 GRF57 GFF 97 GRF57	Y..80M$_2$-4 AM80 AD2

n_2 [1/min]	M_2 [Nm]	i	Fr [N]	K	Frame size		Input Configuration
P_1=0.75kw							
1.60	4050	898	30600	1.05	GFA	97 GRF57	Y..80M_2-4
1.80	3580	784	31900	1.20	GFAF	97 GRF57	AM80
2.10	3110	690	33000	1.40	GF	97 GRF57	AD3
2.40	2740	605	33900	1.55	GFF	97 GRF57	
2.70	2380	529	34600	1.80			
3.10	2100	467	35200	2.00			
3.50	1810	406	35700	2.40			
4.00	1620	363	36100	2.60			
2.10	3040	674	18000	1.00	GFA	87 GRF57	Y..80M_2-4
2.40	2760	609	23800	1.10	GFAF	87 GRF57	AM80
2.80	2330	515	25400	1.30	GF	87 GRF57	AD3
3.20	2050	452	26300	1.45	GFF	87 GRF57	
4.20	1540	345	27700	1.95			
3.90	1680	367	14400	0.90	GFA	77 GRF37	Y..80M_2-4
4.40	1480	323	15800	1.00	GFAF	77 GRF37	AM80
5.10	1280	280	17000	1.15	GF	77 GRF37	AD2
					GFF	77 GRF37	
3.40	2100	276.77	35200	2.00	GFA	97	Y..90S-6
3.70	1930	253.41	35500	2.20	GFAF	97	AM90
4.20	1700	223.88	35900	2.50	GF	97	AD3
					GFF	97	
3.50	2060	270.68	26200	1.45	GFA	87	Y..90S-6
3.70	1940	255.37	26600	1.55	GFAF	87	AM90
4.10	1740	228.93	27200	1.70	GF	87	AD2
4.80	1500	197.20	27800	2.00	GFF	87	
5.20	1370	179.97	28100	2.20			
5.90	1210	159.61	28500	2.50			
5.30	1350	270.68	28200	2.20	GFA	87	Y..80M_2-4
5.60	1270	255.37	28400	2.40	GFAF	87	AM80
6.30	1140	228.93	28700	2.60	GF	87	AD2
					GFF	87	
4.70	1510	198.31	15700	1.00	GFA	77	Y..90S-6
5.00	1430	188.40	16100	1.05	GFAF	77	AM90
5.60	1260	166.47	17100	1.20	GF	77	AD2
6.60	1080	142.27	18000	1.40	GFF	77	
7.20	990	130.42	18300	1.50			
6.40	1120	225.79	17800	1.35	GFA	77	Y..80M_2-4
7.20	980	198.31	18300	1.50	GFAF	77	AM80
7.60	940	188.40	18500	1.60	GF	77	AD2
8.60	830	166.47	18900	1.80	GFF	77	
10.0	710	142.27	19200	2.10			
11.0	650	130.42	19400	2.30			
13.0	570	114.45	19600	2.60			
13.0	540	108.46	19600	2.80			
8.40	850	170.85	10000	0.95	GFA	67	Y..80M_2-4
8.80	810	162.31	10400	1.00	GFAF	67	AM80
10.0	710	142.40	11200	1.15	GF	67	AD2
12.0	600	120.79	11900	1.35	GFF	67	
13.0	540	109.04	12200	1.50			
15.0	475	95.94	12500	1.70			
16.0	450	90.59	12600	1.80			
18.0	395	79.76	12800	2.10			

n_2 [1/min]	M_2 [Nm]	i	Fr [N]	K	Frame size		Input Configuration
P_1=0.75kw							
21.0	335	67.65	13000	2.40	GFA	67	Y..80M_2-4
24.0	300	61.07	13000	2.70	GFAF	67	AM80
					GF	67	AD2
					GFF	67	
11.0	635	127.27	7770	0.95	GFA	57	Y..80M_2-4
13.0	545	110.01	9580	1.10	GFAF	57	AM80
15.0	465	93.47	10100	1.30	GF	57	AD2
17.0	415	83.46	10500	1.45	GFF	57	
20.0	360	72.98	10800	1.65			
21.0	340	68.22	10900	1.75			
24.0	290	58.97	11200	2.00			
29.0	250	50.10	11400	2.40			
32.0	220	44.73	11300	2.70			
18.0	395	79.72	5950	1.00	GFA	47	Y..80M_2-4
21.0	335	68.09	6670	1.20	GFAF	47	AM80
					GF	47	AD1
					GFF	47	
22.0	325	65.36	6810	1.25	GFA	47	Y..80M_2-4
25.0	280	56.49	7220	1.40	GFAF	47	AM80
30.0	235	48.00	7530	1.65	GF	47	AD2
33.0	210	42.86	7690	1.85	GFF	47	
39.0	183	36.61	7860	2.20			
42.0	171	34.29	7780	2.30			
50.0	144	28.88	7460	2.80			
31.0	230	47.02	3720	0.85	GFA	37	Y..80M_2-4
33.0	215	43.83	4000	0.90	GFAF	37	AM80
37.0	191	38.31	4420	1.05	GF	37	AD2
40.0	179	35.91	4570	1.10	GFF	37	
45.0	158	31.69	4590	1.25			
51.0	140	28.09	4510	1.45			
61.0	118	23.63	4370	1.70			
70.0	103	20.57	4260	1.95			
74.0	96	19.27	4200	2.10			
84.0	85	17.03	4090	2.40			
100	72	14.33	3930	2.80			
112	64	12.87	3840	3.10			
62.0	116	23.25	2910	1.10	GFA	27	Y..80M_2-4
71.0	101	20.15	2860	1.30	GFAF	27	AM80
76.0	94	18.84	2840	1.40	GF	27	AD2
88.0	81	16.28	2770	1.60	GFF	27	
104	69	13.84	2700	1.90			
116	62	12.35	2640	2.10			
136	53	10.55	2560	2.50			
145	49	9.88	2520	2.60			
153	47	9.40	2450	2.80	GFA	27	Y..80M_2-4
177	41	8.13	2370	3.00	GFAF	27	AM80
208	34	6.91	2290	3.30	GF	27	AD2
233	31	6.17	2230	3.50	GFF	27	
272	26	5.27	2140	3.80			
291	25	4.93	2100	3.90			
345	21	4.16	2010	4.20			

n_2 [1/min]	M_2 [Nm]	i	Fr [N]	K	Frame size	Input Configuration
P_1=0.75kw						
356	20	8.13	2000	6.10	GFA 27 GFAF 27 GF 27 GFF 27	Y..80M1-2 AM80 AD2
418	17	6.91	1910	6.70		
469	15	6.17	1850	7.10		
549	13	5.27	1770	7.60		
586	12	4.93	1740	7.90		
695	10	4.16	1650	8.40		
P_1=1.10kw						
0.51	17900	2780	100500	1.00	GFA 157 GRF97 GFAF 157 GRF97 GF 157 GRF97 GFF 157 GRF97	Y..90S-4 AM90 AD3
0.58	15800	2427	106100	1.15	GFA 157 GRF97 GFAF 157 GRF97 GF 157 GRF97 GFF 157 GRF97	Y..90S-4 AM90 AD5
0.65	14100	2185	110000	1.25		
0.73	12500	1944	113100	1.45		
0.85	11100	1674	115600	1.60		
1.10	8610	1308	119100	2.10		
1.20	7630	1169	120000	2.40		
1.50	6100	953	120000	3.00		
1.70	5330	845	120000	3.40		
3.20	2810	446	120000	6.40		
4.70	1900	302	120000	9.40		
0.70	13700	2038	87000	0.85	GFA 127 GRF77 GFAF 127 GRF77 GF 127 GRF77 GFF 127 GRF77	Y..90S-4 AM90 AD3
0.80	12000	1784	90000	1.00		
0.88	10700	1606	90000	1.10		
1.00	9330	1390	90000	1.30		
1.20	8150	1220	90000	1.45		
1.30	7250	1077	90000	1.65		
1.10	8350	1243	48000	0.90	GFA 107 GRF77 GFAF 107 GRF77 GF 107 GRF77 GFF 107 GRF77	Y..90S-4 AM90 AD3
1.30	7380	1087	50600	1.05		
1.50	6380	950	53100	1.20		
1.70	5570	834	55000	1.40		
1.90	4890	736	56500	1.55		
2.20	4310	6405	7800	1.80	GFA 107 GRF77 GFAF 107 GRF77 GF 107 GRF77 GFF 107 GRF77	Y..90S-4 AM90 AD4
2.10	4670	690	27400	0.90	GFA 97 GRF57 GFAF 97 GRF57 GF 97 GRF57 GFF 97 GRF57	Y..90S-4 AM90 AD3
2.40	4110	605	30400	1.05		
2.70	3580	529	31900	1.20		
3.00	3160	467	32900	1.35		
3.50	2730	406	33900	1.55		
3.90	2450	363	34500	1.75		
3.10	3080	452	16400	0.95	GFA 87 GRF57 GFAF 87 GRF57 GF 87 GRF57 GFF 87 GRF57	Y..90S-4 AM90 AD3
4.10	2320	345	25400	1.30		
4.70	2010	300	26400	1.50		
5.70	1670	249	27400	1.80		
3.40	3090	276.77	33100	1.40	GFA 97 GFAF 97 GF 97 GFF 97	Y..90L-6 AM90 AD3
3.70	2830	253.41	33700	1.50		
4.20	2500	223.88	34400	1.70		
5.00	2120	189.92	35200	2.00		
5.40	1950	174.87	35500	2.20		

n_2 [1/min]	M_2 [Nm]	i	Fr [N]	K	Frame size	Input Configuration
P_1=1.10kw						
5.10	2040	276.77	35300	2.10	GFA 97 GFAF 97 GF 97 GFF 97	Y..90S-4 AM90 AD3
5.60	1870	253.41	35600	2.30		
6.30	1650	223.88	36000	2.60		
4.10	2550	228.93	24600	1.15	GFA 87 GFAF 87 GF 87 GFF 87	Y..90L-6 AM90 AD2
4.80	2200	197.20	25800	1.35		
5.20	2010	179.97	26400	1.50		
5.90	1780	159.61	27100	1.70		
5.20	2000	270.68	26400	1.50	GFA 87 GFAF 87 GF 87 GFF 87	Y..90S-4 AM90 AD2
5.60	1880	255.37	26800	1.60		
6.20	1690	228.93	27300	1.75		
7.20	1450	197.20	27900	2.10		
7.90	1330	179.97	28200	2.20	GFA 87 GFAF 87 GF 87 GFF 87	Y..90S-4 AM90 AD2
8.90	1180	159.61	28600	2.50		
11.0	990	134.16	29000	3.00		
12.0	910	123.29	29200	3.30		
7.20	1460	198.31	15900	1.00	GFA 77 GFAF 77 GF 77 GFF 77	Y..90S-4 AM90 AD2
7.50	1390	188.4	16400	1.10		
8.50	1230	166.47	17300	1.20		
10.0	1050	142.27	18100	1.45		
11.0	960	130.42	18400	1.55		
12.0	840	114.45	18800	1.75		
13.0	800	108.46*	19000	1.85		
15.0	700	94.93	19300	2.10		
17.0	630	85.52	19400	2.40		
19.0	555	75.02	19600	2.70		
12.0	890	120.79	9600	0.90	GFA 67 GFAF 67 GF 67 GFF 67	Y..90S-4 AM90 AD2
13.0	800	109.04	10400	1.00		
15.0	705	95.94	11200	1.15		
16.0	670	90.59	11500	1.20		
18.0	590	79.76	12000	1.40		
21.0	500	67.65	12400	1.65		
23.0	450	61.07	12600	1.80		
26.0	395	53.73	12800	2.10		
28.0	375	50.74	12900	2.20		
33.0	315	43.20	13000	2.60		
36.0	290	39.26	13000	2.70		
42.0	250	34.01	13000	2.90		
17.0	615	83.46	9070	0.95	GFA 57 GFAF 57 GF 57 GFF 57	Y..90S-4 AM90 AD2
19.0	535	72.98	9640	1.10		
21.0	500	68.22	9890	1.20		
24.0	435	58.97	10300	1.40		
28.0	370	50.10	10700	1.60		
32.0	330	44.73	10700	1.80		
37.0	280	38.21	10300	2.10		
40.0	260	35.79	10200	2.30		
47.0	220	30.15	9780	2.60		
25.0	415	56.49	4570	0.95	GFA 47 GFAF 47 GF 47 GFF 47	Y..90S-4 AM90 AD2
30.0	355	48.00*	6500	1.15		
33.0	315	42.86	6900	1.25		
39.0	270	36.61	7300	1.50		
41.0	250	34.29	7240	1.60		
49.0	210	28.88	7020	1.85		

n_2 [1/min]	M_2 [Nm]	i	Fr [N]	K	Frame size	Input Configuration
P_1=1.10kw						
46.0	225	30.86	7110	1.75	GFA 47 GFAF 47 GF 47 GFF 47	Y..90S-4 AM90 AD2
48.0	215	29.32	7040	1.85		
55.0	190	25.72	6860	2.10		
65.0	161	21.82	6620	2.50		
72.0	146	19.70	6470	2.80	GFA 37 GFAF 37 GF 37 GFF 37	Y..90S-4 AM90 AD2
45.0	230	31.69	3720	0.85		
51.0	205	28.09	3970	0.95		
59.0	177	23.88	3930	1.15		
69.0	152	20.57	3870	1.30		
74.0	143	19.27	3840	1.40		
83.0	126	17.03	3770	1.60		
99.0	106	14.33	3670	1.90		
110	95	12.87	3600	2.10		
128	82	11.08	3490	2.30		
136	77	10.42	3450	2.40		
158	66	8.97	3340	2.60		
70.0	149	20.15	2440	0.85	GFA 27 GFAF 27 GF 27 GFF 27	Y..90S-4 AM90 AD2
75.0	139	18.84	2440	0.95		
87.0	120	16.28	2440	1.10		
103	102	13.84	2410	1.25		
115	91	12.35	2390	1.40		
135	78	10.55	2340	1.65		
144	73	9.88	2320	1.80		
151	70	9.40	2240	1.85		
175	60	8.13	2190	2.00		
206	51	6.91	2130	2.20		
230	46	6.17	2090	2.40		
270	39	5.27	2020	2.60		
288	36	4.93	2000	2.60		
342	31	4.16	1920	2.80		
353	30	8.13	1910	4.10	GFA 27 GFAF 27 GF 27 GFF 27	Y..80M$_1$-2 AM80 AD2
416	25	6.91	1840	4.50		
465	23	6.17	1780	4.80		
545	19	5.27	1720	5.20		
582	18	4.93	1680	5.30		
691	15	4.16	1610	5.70		
P_1=1.50kw						
0.85	15200	1674	107600	1.20	GFA 157 GRF97 GFAF 157 GRF97 GF 157 GRF97 GFF 157 GRF97	Y..90L-4 AM90 AD4
0.59	21800	2427	86800	0.80	GFA 157 GRF97 GFAF 157 GRF97 GF 157 GRF97 GFF 157 GRF97	Y..90L-4 AM90 AD5
0.65	19500	2185	95400	0.90		
0.74	17300	1944	102100	1.05		
1.10	11800	1308	114400	1.50		
1.20	10500	1169	116500	1.70		
1.50	8450	953	119300	2.10		
1.70	7410	845	120000	2.40		
3.20	3910	446	120000	4.60		
4.70	2650	302	120000	6.80		

n_2 [1/min]	M_2 [Nm]	i	Fr [N]	K	Frame size	Input Configuration
P_1=1.50kw						
0.89	14700	1606	85100	0.80	GFA 127 GRF77 GFAF 127 GRF77 GF 127 GRF77 GFF 127 GRF77	Y..90L-4 AM90 AD3
1.00	12700	1390	89000	0.95		
1.20	11100	1220	90000	1.05		
1.30	9910	1077	90000	1.20		
1.50	8500	930	90000	1.40		
1.70	7480	820	90000	1.60		
2.00	6610	727	90000	1.80		
2.20	5960	648	90000	2.00	GFA 127 GRF77 GFAF 127 GRF77 GF 127 GRF77 GFF 127 GRF77	Y..90L-4 AM90 AD4
1.50	8720	950	46900	0.90	GFA 107 GRF77 GFAF 107 GRF77 GF 107 GRF77 GFF 107 GRF77	Y..90L-4 AM90 AD3
1.70	7630	834	49900	1.00		
1.90	6710	736	52300	1.15		
2.20	5890	640	54300	1.30		
2.60	5090	560	56100	1.50		
2.90	4440	489	57500	1.75		
3.30	4010	436	58400	1.90	GFA 107 GRF77 GFAF 107 GRF77 GF 107 GRF77 GFF 107 GRF77	Y..90L-4 AM90 AD4
3.90	3400	370	59600	2.30		
2.70	4880	529	19300	0.90	GFA 97 GRF57 GFAF 97 GRF57 GF 97 GRF57 GFF 97 GRF57	Y..90L-4 AM90 AD3
3.10	4320	467	29800	1.00		
3.50	3730	406	31500	1.15		
3.90	3340	363	32500	1.30		
4.80	2760	300	23900	1.10	GFA 87 GRF57 GFAF 87 GRF57 GF 87 GRF57 GFF 87 GRF57	Y..90L-4 AM90 AD3
5.70	2290	249	25500	1.30		
3.70	3870	254.40	58700	2.00	GFA 107 GFAF 107 GF 107 GFF 107	Y..100L-6 AM100 AD3
4.40	3280	215.37	59800	2.30		
4.70	3030	199.31	60300	2.50		
5.30	2720	178.64	60900	2.80		
3.40	4210	276.77	30100	1.00	GFA 97 GFAF 97 GF 97 GFF 97	Y..100L-6 AM100 AD3
3.70	3860	253.41	31100	1.10		
4.20	3410	223.88	32300	1.25		
5.00	2890	189.92	33600	1.50		
5.40	2660	174.87	34100	1.60		
5.20	2770	276.77	33800	1.55	GFA 97 GFAF 97 GF 97 GFF 97	Y..90L-4 AM90 AD3
5.60	2530	253.41	34300	1.70		
6.40	2240	223.88	34900	1.90		
7.50	1900	189.92	35600	2.30		
8.20	1750	174.87	35800	2.40		
5.30	2710	270.68	24000	1.10	GFA 87 GFAF 87 GF 87 GFF 87	Y..90L-4 AM90 AD2
5.60	2550	255.37	24600	1.15		
6.20	2290	228.93	25500	1.30		
7.20	1970	197.20	26500	1.50		

n_2 [1/min]	M_2 [Nm]	i	Fr [N]	K	Frame size	Input Configuration
P_1=1.50kw						
8.00	1800	179.97	27000	1.65	GFA 87 GFAF 87 GF 87 GFF 87	Y..90L-4 AM90 AD2
9.00	1590	159.61	27600	1.90		
11.00	1340	134.16	28200	2.20		
13.00	1090	109.49	28800	2.70		
15.00	980	97.89	29000	3.10		
8.60	1660	166.47	14500	0.90	GFA 77 GFAF 77 GF 77 GFF 77	Y..90L-4 AM90 AD2
10.0	1420	142.27	16200	1.05		
11.0	1300	130.42	16900	1.15		
12.0	1140	114.45	17700	1.30		
13.0	1080	108.46	18000	1.40		
15.0	950	94.93	18500	1.60		
17.0	850	85.52	18800	1.75		
19.0	750	75.02	19100	2.00		
20.0	725	72.50	19200	2.10	GFA 77 GFAF 77 GF 77 GFF 77	Y..90L-4 AM90 AD2
22.0	665	66.46	19300	2.20		
25.0	580	58.32	19500	2.60		
26.0	550	55.27	19600	2.70		
30.0	480	48.37	19700	3.10		
33.0	435	43.58	19800	3.40	GFA 77 GFAF 77 GF 77 GFF 77	Y..90L-4 AM90 AD3
37.0	380	38.23	19900	3.90		
39.0	365	36.58	19900	3.00		
45.0	315	31.51	20000	4.40		
16.0	900	90.59	9450	0.90	GFA 67 GFAF 67 GF 67 GFF 67	Y..90L-4 AM90 AD2
18.0	795	79.76	10500	1.05		
21.0	675	67.65	11400	1.20		
23.0	610	61.07	11800	1.35		
27.0	535	53.73	12200	1.50		
28.0	505	50.74	12400	1.60		
33.0	430	43.20	12700	1.90		
36.0	390	39.26	12800	2.00		
39.0	360	36.30	12900	2.30		
45.0	320	32.08	13000	2.60	GFA 67 GFAF 67 GF 67 GFF 67	Y..90L-4 AM90 AD3
52.0	270	27.41	13000	3.00		
57.0	250	25.13	13000	3.30		
24.0	590	58.97	9270	1.00	GFA 57 GFAF 57 GF 57 GFF 57	Y..90L-4 AM90 AD2
29.0	500	50.10	9910	1.20		
32.0	445	44.73	9970	1.35		
37.0	380	38.21	9710	1.55		
40.0	355	35.79	9600	1.65		
47.0	300	30.15	9280	1.95		
39.0	365	36.61	6360	1.10	GFA 47 GFAF 47 GF 47 GFF 47	Y..90L-4 AM90 AD2
42.0	340	34.29	6610	1.15		
50.0	285	28.88	6480	1.40		
46.0	305	30.86	6540	1.30		
49.0	290	29.32	6500	1.35	GFA 47 GFAF 47 GF 47 GFF 47	Y..90L-4 AM90 AD2
56.0	255	25.72	6380	1.55		
66.0	215	21.82	6210	1.85		
73.0	197	19.70	6100	2.00		
83.0	174	17.33	5950	2.30		
87.0	164	16.36	5880	2.40		
103	140	13.93	5680	2.90		

n_2 [1/min]	M_2 [Nm]	i	Fr [N]	K	Frame size	Input Configuration
P_1=1.50kw						
70.0	205	20.57	3410	0.95	GFA 37 GFAF 37 GF 37 GFF 37	Y..90L-4 AM90 AD2
74.0	193	19.27	3410	1.05		
84.0	170	17.03	3390	1.15		
100	144	14.33	3350	1.40		
111	129	12.87	3310	1.55		
129	111	11.08	3240	1.70		
137	104	10.42	3210	1.75		
159	90	8.97	3130	1.95		
178	80	8.01	3070	2.10		
103	139	13.84	2080	0.95	GFA 27 GFAF 27 GF 27 GFF 27	Y..90L-4 AM90 AD2
116	124	12.35	2090	1.05		
136	106	10.55	2090	1.25		
145	99	9.88	2080	1.30		
152	94	9.40	1990	1.40		
176	81	8.13	1970	1.50		
207	69	6.91	1950	1.65		
232	62	6.17	1920	1.75		
271	53	5.27	1880	1.90		
290	49	4.93	1860	1.95		
344	42	4.16	1810	2.10		
348	41	8.13	1810	3.00	GFA 27 GFAF 27 GF 27 GFF 27	Y..90S-2 AM90 AD2
410	35	6.91	1750	3.30		
459	31	6.17	1710	3.50		
537	27	5.27	1650	3.80		
574	25	4.93	1630	3.80		
681	21	4.16	1560	4.10		
P_1=2.20kw						
0.99	18500	1441	98700	0.95	GFA 157 GRF97 GFAF 157 GRF97 GF 157 GRF97 GFF 157 GRF97	Y..100L_1-4 AM100 AD4
1.10	17600	1308	101300	1.00	GFA 157 GRF97 GFAF 157 GRF97 GF 157 GRF97 GFF 157 GRF97	Y..100L_1-4 AM100 AD5
1.20	15700	1169	106400	1.15		
1.50	12600	953	112900	1.40		
1.70	11100	845	115500	1.60		
1.90	10000	764	117200	1.80		
2.10	8930	680	118700	2.00		
2.50	7490	576	120000	2.40		
3.20	5900	446	120000	3.00		
4.70	3990	302	120000	4.50		
5.20	3590	273	120000	5.00		
6.20	3010	232	120000	6.00		
7.30	2550	197	120000	7.00		
1.30	14700	1077	85200	0.80	GFA 127 GRF77 GFAF 127 GRF77 GF 127 GRF77 GFF 127 GRF77	Y..100L_1-4 AM100 AD3
1.50	12600	930	89200	0.95		
1.70	11100	820	90000	1.10		
2.00	9840	727	90000	1.20		
2.20	8840	648	90000	1.35	GFA 127 GRF77 GFAF 127 GRF77 GF 127 GRF77 GFF 127 GRF77	Y..100L_1-4 AM100 AD4
2.60	7490	549	90000	1.60		
2.90	6740	495	90000	1.80		
3.30	5830	428	90000	2.10		

n_2 [1/min]	M_2 [Nm]	i	Fr [N]	K	Frame size	Input Configuration
P_1=2.20kw						
2.50 2.90	7590 6620	560 489	50000 52500	1.00 1.15	GFA 107 GRF77 GFAF 107 GRF77 GF 107 GRF77 GFF 107 GRF77	Y..100L1-4 AM100 AD3
2.20 3.30 3.80 4.30	8730 5950 5040 4540	640 436 370 333	46900 54100 56200 57300	0.90 1.30 1.50 1.70	GFA 107 GRF77 GFAF 107 GRF77 GF 107 GRF77 GFF 107 GRF77	Y..100L1-4 AM100 AD4
5.00 5.80	3900 3350	285 245	31000 32500	1.10 1.30	GFA 97 GRF57 GFAF 97 GRF57 GF 97 GRF57 GFF 97 GRF57	Y..100L1-4 AM100 AD3
3.80 4.40 4.80 5.40	5590 4730 4380 3920	254.40 215.37 199.31 178.64	55000 56900 57600 58600	1.35 1.60 1.75 1.95	GFA 107 GFAF 107 GF 107 GFF 107	Y..112M-6 AM112 AD3
5.60 6.60 7.20 8.00	3750 3170 2930 2630	254.40 215.37 199.31 178.64	58900 60100 60500 61100	2.00 2.40 2.60 2.90	GFA 107 GFAF 107 GF 107 GFF 107	Y..100L1-4 AM100 AD3
4.30 5.00 5.50 6.10	4920 4170 3840 3430	223.88 189.92 174.87 156.30	17400 30300 31200 32300	0.85 1.05 1.10 1.25	GFA 97 GFAF 97 GF 97 GFF 97	Y..112M-6 AM112 AD3
5.20 5.60 6.40 7.50 8.20 9.10 10.0 11.0	4080 3730 3300 2790 2570 2300 2070 1870	276.77 253.41 223.88 189.92 174.87 156.30 140.71 127.42	30500 31500 32600 33800 34200 34800 35300 35600	1.05 1.15 1.30 1.55 1.65 1.85 2.10 2.30	GFA 97 GFAF 97 GF 97 GFF 97	Y..100L1-4 AM100 AD3
7.20 7.90 8.90 11.0 12.0 13.0 15.0 16.0 19.0	2900 2650 2350 1970 1810 1610 1440 1290 1120	197.20 179.97 159.61 134.16 123.29 109.49 97.89 88.01 76.39	23000 24300 25300 26500 27000 27500 28000 28300 27800	1.05 1.15 1.25 1.50 1.65 1.85 2.10 2.30 2.70	GFA 87 GFAF 87 GF 87 GFF 87	Y..100L1-4 AM100 AD2
21.0 25.0 28.0 31.0	1000 830 740 665	68.40 56.75 50.36 45.28	27100 25900 25100 24400	3.00 3.60 4.00 4.20	GFA 87 GFAF 87 GF 87 GFF 87	Y..100L1-4 AM100 AD3
12.0 13.0 15.0 17.0 19.0 21.0	1680 1590 1390 1260 1100 970	114.45 108.46 94.93 85.52 75.02 66.46	14300 15000 16400 17100 17900 18400	0.90 0.95 1.05 1.20 1.35 1.55	GFA 77 GFAF 77 GF 77 GFF 77	Y..100L1-4 AM100 AD2

n_2 [1/min]	M_2 [Nm]	i	Fr [N]	K	Frame size	Input Configuration
P_1=2.20kw						
24.0 26.0 29.0	850 810 710	58.32 55.27 48.37	18800 18900 19200	1.75 1.85 2.10	GFA 77 GFAF 77 GF 77 GFF 77	Y..100L1-4 AM100 AD2
33.0 39.0 45.0 50.0	640 535 460 420	43.58 36.58 31.51 28.75	19400 19600 19800 19800	2.30 2.10 3.00 3.40	GFA 77 GFAF 77 GF 77 GFF 77	Y..100L1-4 AM100 AD3
56.0	375	25.50	19900	4.00	GFA 77 GFAF 77 GF 77 GFF 77	Y..100L1-4 AM100 AD4
23.0 27.0 28.0 33.0 36.0 42.0	900 790 745 635 575 500	61.07 53.73 50.74 43.20 39.26 34.01	9520 10600 10900 11700 12000 12400	0.90 1.05 1.10 1.30 1.35 1.50	GFA 67 GFAF 67 GF 67 GFF 67	Y..100L1-4 AM100 AD2
44.0 52.0 57.0 65.0 68.0 78.0	470 400 370 325 305 265	32.08 27.41 25.13 22.05 20.90* 18.29	12500 12800 12900 13000 13000 13000	1.75 2.00 2.20 2.50 2.70 3.00	GFA 67 GFAF 67 GF 67 GFF 67	Y..100L1-4 AM100 AD3
32.0 37.0 40.0 47.0 57.0	655 560 525 440 365	44.73 38.21 35.79 30.15 24.96	5420 8660 8610 8450 8230	0.90 1.05 1.15 1.35 1.55	GFA 57 GFAF 57 GF 57 GFF 57	Y..100L1-4 AM100 AD2
67.0 75.0 85.0 90.0	310 280 245 230	21.17 19.11 16.81 15.88	8000 7850 7650 7560	1.90 2.10 2.40 2.60	GFA 57 GFAF 57 GF 57 GFF 57	Y..100L1-4 AM100 AD3
55.0 65.0 72.0 82.0 87.0 102 113 130 159	375 320 290 255 240 205 187 162 132	25.72 21.82 19.70 17.33 16.36 13.93 12.66 10.97 8.96	5560 5520 5470 5400 5360 5240 5160 5030 4730	1.05 1.25 1.40 1.55 1.65 1.95 2.10 2.50 2.50	GFA 47 GFAF 47 GF 47 GFF 47	Y..100L1-4 AM100 AD2
99.0 111 129 137 159 178 211 236 273 291	210 190 163 154 132 118 99 89 77 72	14.33 12.87 11.08 10.42 8.97 8.01 6.74 6.05 5.21 4.90	2800 2810 2820 2810 2790 2760 2620 2590 2540 2510	0.95 1.05 1.15 1.20 1.30 1.45 1.40 1.50 1.65 1.65	GFA 37 GFAF 37 GF 37 GFF 37	Y..100L1-4 AM100 AD2

n_2 [1/min]	M_2 [Nm]	i	Fr [N]	K	Frame size	Input Configuration
P_1=2.20kw						
338 378	62 56	4.22 3.77	2450 2400	1.75 1.90	GFA 37 GFAF 37 GF 37 GFF 37	Y..100L$_1$-4 AM100 AD2
177 208 233 273 291 354 417 467 547 584 693	119 101 90 77 72 59 50 45 38 36 30	16.28 13.84 12.35 10.55 9.88 8.13 6.91 6.17 5.27 4.93 4.16	1720 1730 1730 1720 1710 1610 1590 1560 1520 1510 1460	1.10 1.30 1.45 1.70 1.80 2.10 2.30 2.40 2.60 2.70 2.90	GFA 27 GFAF 27 GF 27 GFF 27	Y..100L$_1$-4 AM100 AD2
P_1=3.00kw						
1.20 1.50 1.70 1.90 2.10 2.50 3.30 4.80 5.30 6.30 7.40	21100 17100 15100 13500 12000 10100 7980 5400 4860 4080 3460	1169 953 845 764 680 576 446 302 273 232 197	89500 102800 107900 111100 114000 117000 119800 120000 120000 120000 120000	0.85 1.05 1.20 1.30 1.50 1.75 2.20 3.30 3.70 4.40 5.20	GFA 157 GRF97 GFAF 157 GRF97 GF 157 GRF97 GFF 157 GRF97	Y..100L$_2$-4 AM100 AD5
2.00	13200	727	88100	0.90	GFA 127 GRF77 GFAF 127 GRF77 GF 127 GRF77 GFF 127 GRF77	Y..100L$_1$-4 AM100 AD3
2.20 2.60 2.90	11800 10000 9040	648 549 495	90000 90000 90000	1.00 1.20 1.35	GFA 127 GRF77 GFAF 127 GRF77 GF 127 GRF77 GFF 127 GRF77	Y..100L$_1$-4 AM100 AD4
3.30 3.90 4.40 5.00	7970 6760 6090 5320	436 370 333 291	49000 52200 53800 55600	0.95 1.15 1.25 1.45	GFA 107 GRF77 GFAF 107 GRF77 GF 107 GRF77 GFF 107 GRF77	Y..100L$_1$-4 AM100 AD4
3.80 4.40 4.80 5.40	7630 6460 5970 5350	254.40* 215.37 199.31 178.64	49900 52900 54100 55500	1.00 1.20 1.30 1.45	GFA 107 GFAF 107 GF 107 GFF 107	Y..132S-6 AM132 AD3
5.70 6.80 7.30 8.10 9.00	5000 4240 3920 3510 3170	254.40* 215.37 199.31 178.64 161.28*	56300 57900 58600 59400 60100	1.55 1.80 1.95 2.20 2.40	GFA 107 GFAF 107 GF 107 GFF 107	Y..100L$_1$-4 AM100 AD3
6.50 7.70 8.30	4400 3730 3440	223.88 189.92 174.87	29600 31500 32200	1.00 1.15 1.25	GFA 97 GFAF 97 GF 97 GFF 97	Y..100L$_2$-4 AM100 AD3

n_2 [1/min]	M_2 [Nm]	i	Fr [N]	K	Frame size	Input Configuration
P_1=3.00kw						
9.30 10.0 11.0 13.0 14.0 16.0	3070 2770 2500 2220 2010 1760	156.30 140.71 127.42 112.99 102.16 89.85	33100 33800 34400 35000 35400 35800	1.40 1.55 1.70 1.95 2.10 2.40	GFA 97 GFAF 97 GF 97 GFF 97	Y..100L$_2$-4 AM100 AD3
11.0 12.0 13.0 15.0 17.0 19.0	2640 2420 2150 1920 1730 1500	134.16 123.29 109.49 97.89 88.01 76.39	24300 25100 26000 26700 26700 26100	1.15 1.25 1.40 1.55 1.75 2.00	GFA 87 GFAF 87 GF 87 GFF 87	Y..100L$_2$-4 AM100 AD2
21.0 26.0 29.0	1340 1110 990	68.40 56.75 50.36	25500 24600 23900	2.20 2.70 3.00	GFA 87 GFAF 87 GF 87 GFF 87	Y..100L$_2$-4 AM100 AD3
17.0 19.0 22.0 25.0 26.0 30.0	1680 1470 1300 1140 1080 950	85.52 75.02 66.46 58.32 55.27 48.37	14400 15900 16900 17700 18000 18500	0.90 1.00 1.15 1.30 1.40 1.55	GFA 77 GFAF 77 GF 77 GFF 77	Y..100L$_2$-4 AM100 AD2
33.0 38.0 40.0 46.0 51.0	850 750 720 620 565	43.58 38.23 36.58 31.51 28.75	18800 19100 19200 19500 19600	1.75 2.00 1.55 2.20 2.50	GFA 77 GFAF 77 GF 77 GFF 77	Y..100L$_2$-4 AM100 AD3
57.0 68.0	500 420	25.50* 21.43	19700 19800	3.00 3.60	GFA 77 GFAF 77 GF 77 GFF 77	Y..100L$_2$-4 AM100 AD4
34.0 37.0 43.0	850 770 665	43.20 39.26 34.01	10000 10700 11500	0.95 1.00 1.10	GFA 67 GFAF 67 GF 67 GFF 67	Y..100L$_2$-4 AM100 AD2
45.0 53.0 58.0 66.0 70.0 80.0 88.0 101	630 535 490 430 410 360 320 280	32.08 27.41 25.13 22.05 20.90* 18.29 16.48 14.46	11700 12200 12400 12700 12800 12900 13000 13000	1.30 1.50 1.65 1.90 2.00 2.30 2.50 2.90	GFA 67 GFAF 67 GF 67 GFF 67	Y..100L$_2$-4 AM100 AD3
58.0	490	24.96	7420	1.15	GFA 57 GFAF 57 GF 57 GFF 57	Y..100L$_2$-4 AM100 AD2
69.0 76.0 87.0	415 375 330	21.17 19.11 16.81	7310 7220 7100	1.45 1.60 1.80	GFA 57 GFAF 57 GF 57 GFF 57	Y..100L$_2$-4 AM100 AD3

n_2 [1/min]	M_2 [Nm]	i	Fr [N]	K	Frame size	Input Configuration
P_1=3.00kw						
92.0	310	15.88	7040	1.90	GFA 57 GFAF 57 GF 57 GFF 57	Y..100L$_2$-4 AM100 AD3
108	265	13.52	6850	2.20		
118	240	12.29	6730	2.50		
137	205	10.64	6540	2.90		
74.0	385	19.70	4760	1.05	GFA 47 GFAF 47 GF 47 GFF 47	Y..100L$_2$-4 AM100 AD2
84.0	340	17.33	4760	1.15		
89.0	320	16.36	4760	1.25		
104	270	13.93	4720	1.45		
115	245	12.66	4690	1.60		
133	215	10.97	4620	1.85		
162	176	8.96	4350	1.85		
131	215	11.08	2340	0.85	GFA 37 GFAF 37 GF 37 GFF 37	Y..100L$_2$-4 AM100 AD2
140	205	10.42	2360	0.90		
162	177	8.97	2400	1.00		
182	158	8.01	2410	1.10		
216	133	6.74	2290	1.05		
240	119	6.05	2290	1.15		
279	103	5.21	2280	1.20		
297	96	4.90	2270	1.25		
345	83	4.22	2240	1.35		
386	74	3.77	2210	1.40		
P_1=4.00kw						
1.70	20200	845	92900	0.90	GFA 157 GRF97 GFAF 157 GRF97 GF 157 GRF97 GFF 157 GRF97	Y..112M-4 AM112 AD5
1.90	18200	764	99500	1.00		
2.20	16200	680	105100	1.10		
2.50	13600	576	111000	1.30		
3.30	10700	446	116200	1.70		
4.80	7240	302	120000	2.50		
5.30	6520	273	120000	2.80		
6.30	5500	232	120000	3.30		
7.40	4660	197	120000	3.90		
2.70	13300	549	87800	0.90	GFA 127 GRF77 GFAF 127 GRF77 GF 127 GRF77 GFF 127 GRF77	Y..112M-4 AM112 AD4
3.00	12000	495	90000	1.00		
3.40	10400	428	90000	1.15		
3.90	9140	376	90000	1.30		
4.40	8120	333	48600	0.95	GFA 107 GRF77 GFAF 107 GRF77 GF 107 GRF77 GFF 107 GRF77	Y..112M-4 AM112 AD4
5.00	7090	291	51300	1.10		
5.70	6210	255	53500	1.25		
5.70	6650	254.40	52400	1.15	GFA 107 GFAF 107 GF 107 GFF 107	Y..112M-4 AM112 AD3
6.80	5630	215.37	54900	1.35		
7.30	5210	199.31	55800	1.45		
8.20	4670	178.64	57000	1.65		
9.00	4210	161.28	58000	1.80		
10.0	3830	146.49	58800	2.00		
11.0	3400	129.97	59600	2.30		
12.0	3080	117.94	60200	2.50		
14.0	2650	101.38	61000	2.90	GFA 107 GFAF 107 GF 107 GFF 107	Y..112M-4 AM112 AD4

n_2 [1/min]	M_2 [Nm]	i	Fr [N]	K	Frame size	Input Configuration
P_1=4.00kw						
8.40	4570	174.87	29100	0.95	GFA 97 GFAF 97 GF 97 GFF 97	Y..112M-4 AM112 AD3
9.30	4080	156.30	30500	1.05		
10.0	3680	140.71	31600	1.15		
11.0	3330	127.42	32500	1.30		
13.0	2950	112.99	33400	1.45		
14.0	2670	102.16	34000	1.60		
15.0	2550	97.58	34300	1.70		
16.0	2350	89.85	34700	1.85		
18.0	2100	80.31	35200	2.00		
20.0	1890	72.29	35600	2.30		
22.0	1710	65.47	35900	2.50	GFA 97 GFAF 97 GF 97 GFF 97	Y..112M-4 AM112 AD4
13.0	2860	109.49	23500	1.05	GFA 87 GFAF 87 GF 87 GFF 87	Y..112M-4 AM112 AD2
15.0	2560	97.89	24600	1.15		
17.0	2300	88.01	24500	1.30		
19.0	1990	76.39	24100	1.50		
21.0	1780	68.40	23800	1.70	GFA 87 GFAF 87 GF 87 GFF 87	Y..112M-4 AM112 AD3
26.0	1480	56.75	23100	2.00		
29.0	1310	50.36	22600	2.20		
32.0	1180	45.28	22200	2.40		
22.0	1730	66.46	13900	0.85	GFA 77 GFAF 77 GF 77 GFF 77	Y..112M-4 AM112 AD2
25.0	1520	58.32	15600	1.00		
26.0	1440	55.27	16100	1.05		
30.0	1260	48.37	17100	1.20		
34.0	1140	43.58	17700	1.30	GFA 77 GFAF 77 GF 77 GFF 77	Y..112M-4 AM112 AD3
38.0	1000	38.23	18300	1.50		
43.0	880	33.74	18700	1.70		
49.0	780	29.91	19000	1.90		
57.0	665	25.54	19300	2.20		
46.0	820	31.51	18900	1.65		
51.0	750	28.75	19100	1.90		
57.0	665	25.50	19300	2.20	GFA 77 GFAF 77 GF 77 GFF 77	Y..112M-4 AM112 AD4
68.0	560	21.43	19600	2.70		
74.0	515	19.70	19700	2.90		
53.0	715	27.41	11100	1.15	GFA 67 GFAF 67 GF 67 GFF 67	Y..112M-4 AM112 AD3
58.0	655	25.13	11600	1.25		
66.0	575	22.05	12000	1.40		
70.0	545	20.90	12200	1.50		
80.0	475	18.29	12500	1.70		
89.0	430	16.48	12700	1.90		
101	375	14.46	12900	2.20	GFA 67 GFAF 67 GF 67 GFF 67	Y..112M-4 AM112 AD3
114	330	12.76	13000	2.50		
129	295	11.31	13000	2.80		
151	250	9.66	13000	3.20		
161	235	9.08	12900	2.20		
170	225	8.60	12700	2.50		
194	197	7.53	12300	3.10		
215	178	6.78	12000	3.50		
245	156	5.95	11700	3.90		

n_2 [1/min]	M_2 [Nm]	i	Fr [N]	K	Frame size	Input Configuration
P_1=4.00kw						
278	137	5.25	11300	4.30	GFA 67 GFAF 67 GF 67 GFF 67	Y..112M-4 AM112 AD3
314	122	4.66	11000	4.60		
367	104	3.97	10500	4.80		
69.0	550	21.17	6490	1.10	GFA 57 GFAF 57 GF 57 GFF 57	Y..112M-4 AM112 AD3
76.0	500	19.11	6480	1.20		
87.0	435	16.81	6440	1.35		
92.0	415	15.88	6420	1.45		
108	350	13.52	6320	1.70		
119	320	12.29	6250	1.85		
137	275	10.64	6120	2.20		
157	240	9.31	5820	1.70		
178	210	8.19	5710	1.95		
189	200	7.73	5650	2.10		
222	172	6.58	5480	2.40		
244	157	5.98	5380	2.70		
282	136	5.18	5220	3.10		
P_1=5.50kw						
2.50	19000	576	96900	0.95	GFA 157 GRF97 GFAF 157 GRF97 GF 157 GRF97 GFF 157 GRF97	Y..132S-4 AM132 AD5
2.90	16500	503	104200	1.10		
3.30	14800	446	108400	1.20		
4.10	11600	353	114800	1.55		
4.80	10000	302	117200	1.80		
5.30	9080	273	118500	2.00		
6.30	7660	232	120000	2.40		
7.20	6660	202	120000	2.70		
7.40	6500	197	120000	2.80		
3.50	13900	418	86600	0.85	GFA 127 GRF87 GFAF 127 GRF87 GF 127 GRF87 GFF 127 GRF87	Y..132S-4 AM132 AD4
3.90	12500	374	89500	0.95		
4.70	10400	312	90000	1.15	GFA 127 GRF87 GFAF 127 GRF87 GF 127 GRF87 GFF 127 GRF87	Y..132S-4 AM132 AD5
5.00	9770	293	90000	1.25		
5.60	8620	259	90000	1.40		
6.50	7450	223	90000	1.60		
3.40	14400	428	85700	0.85	GFA 127 GRF77 GFAF 127 GRF77 GF 127 GRF77 GFF 127 GRF77	Y..132S-4 AM132 AD4
3.90	12600	376	89200	0.95		
6.80	7770	215.37	49600	1.00	GFA 107 GFAF 107 GF 107 GFF 107	Y..132S-4 AM132 AD3
7.30	7190	199.31	51100	1.05		
8.10	6440	178.64	53000	1.20		
9.00	5820	161.28	54400	1.30		
9.90	5280	146.49	55700	1.45	GFA 107 GFAF 107 GF 107 GFF 107	Y..132S-4 AM132 AD3
11.0	4690	129.97	57000	1.65		
12.0	4250	117.94	57900	1.80		
14.0	3650	101.38	59100	2.10	GFA 107 GFAF 107 GF 107 GFF 107	Y..132S-4 AM132 AD4
16.0	3330	92.47	59700	2.30		
16.0	3190	88.49	60000	2.40		
17.0	3030	83.99	60300	2.50		

n_2 [1/min]	M_2 [Nm]	i	Fr [N]	K	Frame size	Input Configuration
P_1=5.50kw						
11.0	4590	127.42	29000	0.95	GFA 97 GFAF 97 GF 97 GFF 97	Y..132S-4 AM132 AD3
13.0	4070	112.99	30500	1.05		
14.0	3680	102.16	31600	1.15		
15.0	3520	97.58	32000	1.20	GFA 97 GFAF 97 GF 97 GFF 97	Y..132S-4 AM132 AD3
16.0	3240	89.85	32700	1.35		
17.0	3120	86.59	33000	1.40		
18.0	2890	80.31	33500	1.50		
19.0	2730	75.63	33900	1.60		
20.0	2600	72.29	34200	1.65		
22.0	2360	65.47	34700	1.80	GFA 97 GFAF 97 GF 97 GFF 97	Y..132S-4 AM132 AD4
25.0	2090	58.06	34400	2.00		
28.0	1890	52.49	33800	2.30		
17.0	3170	88.01	11000	0.95	GFA 87 GFAF 87 GF 87 GFF 87	Y..132S-4 AM132 AD2
19.0	2750	76.39	21200	1.10		
21.0	2460	68.40	21200	1.20	GFA 87 GFAF 87 GF 87 GFF 87	Y..132S-4 AM132 AD3
26.0	2040	56.75	21000	1.45		
29.0	1810	50.36	20700	1.60		
32.0	1630	45.28	20500	1.75		
37.0	1410	39.30	20100	1.90		
41.0	1270	35.19	19700	2.00	GFA 87 GFAF 87 GF 87 GFF 87	Y..132S-4 AM132 AD4
50.0	1050	29.20	19100	2.40		
43.0	1220	33.92	19600	2.10		
51.0	1030	28.78	19000	2.40		
55.0	950	26.50	18700	3.10	GFA 87 GFAF 87 GF 87 GFF 87	Y..132S-4 AM132 AD5
61.0	850	23.68	18300	3.50		
30.0	1740	48.37	13800	0.85	GFA 77 GFAF 77 GF 77 GFF 77	Y..132S-4 AM132 AD2
33.0	1570	43.58	15200	0.95	GFA 77 GFAF 77 GF 77 GFF 77	Y..132S-4 AM132 AD3
38.0	1380	38.23	16500	1.10		
43.0	1210	33.74	17400	1.25		
49.0	1070	29.91	18000	1.40		
57.0	920	25.54	18600	1.55		
57.0	920	25.50	18600	1.65	GFA 77 GFAF 77 GF 77 GFF 77	Y..132S-4 AM132 AD4
68.0	770	21.43	19100	1.95		
74.0	710	19.70	19200	2.10		
83.0	630	17.49	19400	2.40		
93.0	560	15.64	19600	2.70		
103	505	14.06	19200	3.00		
119	440	12.20	18600	3.40		

n_2 [1/min]	M_2 [Nm]	i	Fr [N]	K	Frame size	Input Configuration
P_1=5.50kw						
66.0	795	22.05	10500	1.05	GFA 67 GFAF 67 GF 67 GFF 67	Y..132S-4 AM132 AD3
70.0	750	20.90	10900	1.10		
80.0	660	18.29	11500	1.25		
88.0	590	16.48	11900	1.40		
101	520	14.46	12300	1.55		
114	460	12.76	12600	1.80		
129	405	11.31	12800	2.00		
151	345	9.66	12900	2.40		
160	325	9.08	12400	1.60		
169	310	8.60	12200	1.85		
193	270	7.53	11900	2.20		
214	240	6.78	11700	2.50		
245	210	5.95	11300	2.80		
277	190	5.25	11000	3.10		
313	168	4.66	10700	3.30		
366	144	3.97	10300	3.50		
87.0	605	16.81	5460	1.00	GFA 57 GFAF 57 GF 57 GFF 57	Y..132S-4 AM132 AD3
92.0	570	15.88	5490	1.05		
108	485	13.52	5530	1.25		
118	440	12.29	5530	1.35		
137	380	10.64	5500	1.55		
178	295	8.19	5180	1.40	GFA 57 GFAF 57 GF 57 GFF 57	Y..132S-4 AM132 AD3
188	275	7.73	5150	1.50		
221	235	6.58	5060	1.75		
243	215	5.98	5000	1.95		
281	187	5.18	4890	2.20		
P_1=7.50kw						
4.70	14100	312	86300	0.85	GFA 127 GRF87 GFAF 127 GRF87 GF 127 GRF87 GFF 127 GRF87	Y..132M-4 AM132 AD5
5.00	13200	293	88000	0.90		
5.70	11700	259	90000	1.05		
6.60	10100	223	90000	1.20		
7.40	8930	198	90000	1.35		
8.60	8320	170.83	90000	1.45	GFA 127 GFAF 127 GF 127 GFF 127	Y..132M-4 AM132 AD4
9.60	7480	153.67	90000	1.60		
12.0	6100	125.37	90000	1.95		
8.20	8700	178.64	47000	0.90	GFA 107 GFAF 107 GF 107 GFF 107	Y..132M-4 AM132 AD3
9.10	7850	161.28	49300	1.00		
10.0	7130	146.49	51200	1.10		
11.0	6330	129.97	53200	1.20		
12.0	5740	117.94	54600	1.35		
14.0	4930	101.38	56400	1.55	GFA 107 GFAF 107 GF 107 GFF 107	Y..132M-4 AM132 AD4
16.0	4500	92.47	57400	1.70		
17.0	4310	88.49	57800	1.80		
18.0	4090	83.99	58200	1.90		
20.0	3630	74.52	59200	2.10		
22.0	3290	67.62	59800	2.30		
15.0	4750	97.58	24800	0.90	GFA 97 GFAF 97 GF 97 GFF 97	Y..132M-4 AM132 AD3
16.0	4370	89.85	29700	1.00		
17.0	4210	86.59	30100	1.00		
18.0	3910	80.31	31000	1.10		
19.0	3680	75.63	31600	1.15		

n_2 [1/min]	M_2 [Nm]	i	Fr [N]	K	Frame size	Input Configuration
P_1=7.50kw						
20.0	3520	72.29	32000	1.20	GFA 97 GFAF 97 GF 97 GFF 97	Y..132M-4 AM132 AD3
22.0	3180	65.47	32200	1.35	GFA 97 GFAF 97 GF 97 GFF 97	Y..132M-4 AM132 AD4
25.0	2820	58.06	31700	1.50		
28.0	2550	52.49	31300	1.70		
33.0	2160	44.49	30500	2.00		
38.0	1890	38.86	29800	2.30		
45.0	1580	32.50	28800	2.70		
34.0	2100	43.28	30400	1.45		
40.0	1780	36.64	29400	1.70		
43.0	1650	33.91	29000	2.60	GFA 97 GFAF 97 GF 97 GFF 97	Y..132M-4 AM132 AD5
48.0	1480	30.39	28400	2.90		
26.0	2760	56.75	18100	1.10	GFA 87 GFAF 87 GF 87 GFF 87	Y..132M-4 AM132 AD3
29.0	2450	50.36	18200	1.20		
32.0	2200	45.28	18200	1.30		
37.0	1910	39.30	18100	1.40		
42.0	1710	35.19	17900	1.50	GFA 87 GFAF 87 GF 87 GFF 87	Y..132M-4 AM132 AD4
50.0	1420	29.20	17600	1.75		
51.0	1400	28.78	17500	1.75		
55.0	1290	26.50	17300	2.30	GFA 87 GFAF 87 GF 87 GFF 87	Y..132M-4 AM132 AD5
62.0	1150	23.68	17100	2.60		
69.0	1030	21.32	16800	2.90		
76.0	940	19.31	16500	3.20		
86.0	830	17.12	16100	3.60		
95.0	750	15.48	15800	4.00		
44.0	1640	33.74	14700	0.90	GFA 77 GFAF 77 GF 77 GFF 77	Y..132M-4 AM132 AD3
49.0	1450	29.91	16000	1.05		
58.0	1240	25.54	17200	1.15		
58.0	1240	25.50	17200	1.20	GFA 77 GFAF 77 GF 77 GFF 77	Y..132M-4 AM132 AD4
69.0	1040	21.43	18100	1.45		
75.0	950	19.70	18500	1.55		
84.0	850	17.49	18800	1.75		
94.0	760	15.64	18900	1.95		
105	685	14.06	18500	2.20		
120	590	12.20	17900	2.50		
135	530	10.93	17500	2.80		
158	450	9.30	16400	2.40		
178	400	8.26	16000	2.70		
199	355	7.39	15600	3.00		
221	320	6.64	15200	3.30		
255	280	5.76	14700	3.80		
285	250	5.16	14400	4.30		
343	205	4.28	13700	4.80		

n_2 [1/min]	M_2 [Nm]	i	Fr [N]	K	Frame size	Input Configuration
P_1=11.0kw						
4.90	20000	302	93600	0.90	GFA 157 GRF97 GFAF 157 GRF97 GF 157 GRF97 GFF 157 GRF97	Y..160M-4 AM160 AD5
5.40	18100	273	99900	1.00		
6.40	15300	232	107400	1.15		
7.30	13300	202	111600	1.35		
7.50	12900	197	112300	1.40		
6.60	14800	223	84900	0.80	GFA 127 GRF87 GFAF 127 GRF87 GF 127 GRF87 GFF 127 GRF87	Y..160M-4 AM160 AD5
7.50	13100	198	88300	0.90		
8.90	11000	166	90000	1.10		
5.50	19000	267.43	97000	0.95	GFA 157 GFAF 157 GF 157 GFF 157	Y..160M-4 AM160 AD5
6.80	15400	217.62	106900	1.15		
8.30	12600	178.20	112900	1.40		
9.00	11600	162.96	114800	1.55		
10.0	10000	141.80	117100	1.80		
12.0	8910	125.14	118700	2.00		
14.0	7720	108.49	120000	2.30		
15.0	6870	96.53	120000	2.60		
17.0	6110	85.80	117400	3.00		
19.0	5580	78.46	115000	3.20		
22.0	4860	68.28	111300	3.70		
8.60	12100	170.83	90000	1.00	GFA 127 GFAF 127 GF 127 GFF 127	Y..160M-4 AM160 AD4
9.60	10900	153.67	90000	1.10		
12.0	8920	125.37	90000	1.35		
13.0	8140	114.34	90000	1.45		
15.0	7040	98.95	90000	1.70		
17.0	6210	87.31	90000	1.95		
20.0	5370	75.41	88200	2.20		
13.0	8390	117.94	47900	0.90	GFA 107 GFAF 107 GF 107 GFF 107	Y..160M-4 AM160 AD3
15.0	7210	101.38	51000	1.05	GFA 107 GFAF 107 GF 107 GFF 107	Y..160M-4 AM160 AD4
16.0	6580	92.47	52600	1.15		
18.0	5980	83.99	54100	1.30		
20.0	5300	74.52	55600	1.45		
22.0	4810	67.62	56700	1.60		
25.0	4130	58.12	56200	1.85		
29.0	3610	50.73	54900	2.10		
34.0	3060	43.03	53300	2.50	GFA 107 GFAF 107 GF 107 GFF 107	Y..160M-4 AM160 AD5
44.0	2400	33.79	50700	3.10	GFA 107 GFAF 107 GF 107 GFF 107	Y..160M-4 AM160 AD6
54.0	1960	27.57	48500	4.00		
59.0	1790	25.14	47500	4.40		
23.0	4660	65.47	26900	0.90	GFA 97 GFAF 97 GF 97 GFF 97	Y..160M-4 AM160 AD4
25.0	4130	58.06	27100	1.05		
28.0	3730	52.49	27100	1.15		
33.0	3160	44.49	26900	1.35		
38.0	2760	38.86	26700	1.55		
45.0	2310	32.50	26200	1.85		

n_2 [1/min]	M_2 [Nm]	i	Fr [N]	K	Frame size	Input Configuration
P_1=11.0kw						
44.0	2410	33.91	26300	1.80	GFA 97 GFAF 97 GF 97 GFF 97	Y..160M-4 AM160 AD5
49.0	2160	30.39	25900	2.00	GFA 97 GFAF 97 GF 97 GFF 97	Y..160M-4 AM160 AD5
54.0	1950	27.44	25500	2.20		
59.0	1770	24.92	25100	2.40		
67.0	1570	22.11	24600	2.70		
38.0	2790	39.30	14600	0.95	GFA 87 GFAF 87 GF 87 GFF 87	Y..160M-4 AM160 AD3
42.0	2500	35.19	14800	1.05	GFA 87 GFAF 87 GF 87 GFF 87	Y..160M-4 AM160 AD4
51.0	2070	29.20	15000	1.20		
56.0	1880	26.50	15000	1.60	GFA 87 GFAF 87 GF 87 GFF 87	Y..160M-4 AM160 AD5
62.0	1680	23.68	15000	1.80		
69.0	1510	21.32	14900	2.00		
76.0	1370	19.31	14800	2.20		
86.0	1210	17.12	14600	2.50		
95.0	1100	15.48	14400	2.70		
112	930	13.12	14000	3.20		
75.0	1400	19.70	16300	1.05	GFA 77 GFAF 77 GF 77 GFF 77	Y..160M-4 AM160 AD4
84.0	1240	17.49	17200	1.20		
94.0	1110	15.64	17600	1.35		
105	1000	14.06	17300	1.50		
121	860	12.20	16900	1.75		
135	775	10.93	16600	1.95		
159	660	9.30	15400	1.65		
179	585	8.26	15100	1.85	GFA 77 GFAF 77 GF 77 GFF 77	Y..160M-4 AM160 AD4
200	525	7.39	14800	2.00		
222	470	6.64	14500	2.30		
256	410	5.76	14100	2.60		
286	365	5.16	13800	2.90		
345	300	4.28	13300	3.30		
P_1=15.0kw						
6.30	21100	232	89700	0.85	GFA 157 GRF97 GFAF 157 GRF97 GF 157 GRF97 GFF 157 GRF97	Y..160L-4 AM160 AD5
7.20	18400	202	99000	1.00		
7.50	17900	197	100500	1.00		
6.70	21200	217.62	89000	0.85	GFA 157 GFAF 157 GF 157 GFF 157	Y..160L-4 AM160 AD5
8.20	17400	178.20	101900	1.05		
9.00	15900	162.96	105900	1.15		
10.0	13800	141.80	110600	1.30		
12.0	12200	125.14	113700	1.45		
14.0	10600	108.49	116400	1.70		
15.0	9430	96.53	115700	1.90		
17.0	8380	85.80	113200	2.20		
19.0	7670	78.46	111100	2.40		
21.0	6670	68.28	108000	2.70		

n_2 [1/min]	M_2 [Nm]	i	Fr [N]	K	Frame size	Input Configuration
P_1=15.0kw						
24.0	5890	60.25	105100	3.10	GFA 157 GFAF 157 GF 157 GFF 157	Y..160L-4 AM160 AD5
12.0 **13.0** **15.0** **17.0** **19.0**	12200 11100 9670 8530 7370	125.37 114.34 98.95 87.31 75.41	89000 88300 87000 85600 83800	1.00 1.05 1.25 1.40 1.65	GFA 127 GFAF 127 GF 127 GFF 127	Y..160L-4 AM160 AD4
21.0	6850	70.07	82800	1.75	GFA 127 GFAF 127 GF 127 GFF 127	Y..160L-4 AM160 AD5
16.0 **17.0** **17.0** **20.0** **22.0**	9040 8650 8210 7280 6610	92.47 88.49 83.99 74.52 67.62	46000 47100 48400 50800 52600	0.85 0.90 0.95 1.05 1.15	GFA 107 GFAF 107 GF 107 GFF 107	Y..160L-4 AM160 AD4
25.0 **29.0**	5680 4960	58.12 50.73	52200 51500	1.35 1.55	GFA 107 GFAF 107 GF 107 GFF 107	Y..160L-4 AM160 AD4
34.0 **39.0** **46.0**	4200 3670 3100	43.03 37.61 31.80	50300 49300 47900	1.85 2.10 2.50	GFA 107 GFAF 107 GF 107 GFF 107	Y..160L-4 AM160 AD5
43.0 **53.0** **58.0** **67.0**	3300 2690 2450 2120	33.79 27.57 25.14 21.76	48400 46700 45800 44500	2.20 2.90 3.20 3.70	GFA 107 GFAF 107 GF 107 GFF 107	Y..160L-4 AM160 AD6
33.0 **38.0** **45.0**	4340 3790 3170	44.49 38.86 32.50	22900 23100 23200	1.00 1.15 1.35	GFA 97 GFAF 97 GF 97 GFF 97	Y..160L-4 AM160 AD4
43.0 **48.0** **53.0** **59.0** **66.0** **73.0** **85.0** **97.0**	3310 2970 2680 2430 2160 1960 1680 1470	33.91 30.39 27.44 24.92 22.11 20.07 17.25 15.06	23200 23200 23100 22900 22600 22400 21900 21400	1.30 1.45 1.60 1.75 2.00 2.20 2.60 2.90	GFA 97 GFAF 97 GF 97 GFF 97	Y..160L-4 AM160 AD5
115 **131**	1240 1090	12.77 11.16	20800 20200	3.40 3.80	GFA 97 GFAF 97 GF 97 GFF 97	Y..160L-4 AM160 AD6
55.0 **62.0** **69.0** **76.0**	2590 2310 2080 1880	26.50 23.68 21.32 19.31	12400 12600 12700 12800	1.15 1.30 1.45 1.60	GFA 87 GFAF 87 GF 87 GFF 87	Y..160L-4 AM160 AD5

n_2 [1/min]	M_2 [Nm]	i	Fr [N]	K	Frame size	Input Configuration
P_1=15.0kw						
86.0 **95.0** **112** **128** **153** **177** **199** **220** **260** **298** **356**	1670 1510 1280 1120 930 810 715 645 550 480 400	17.12 15.48 13.12* 11.46 9.58 8.29 7.35 6.65 5.63 4.92 4.12	12900 12800 12700 12600 12300 11700 11500 11300 11000 10700 10300	1.80 2.00 2.30 2.70 3.10 1.90 2.10 2.40 2.80 3.20 3.60	GFA 87 GFAF 87 GF 87 GFF 87	Y..160L-4 AM160 AD5
P_1=18.5kw						
7.20 **7.50**	22700 22100	202 197	70200 83800	0.80 0.80	GFA 157 GRF97 GFAF 157 GRF97 GF 157 GRF97 GFF 157 GRF97	Y..180M-4 AM180 AD5
8.20 **9.00** **10.0** **12.0** **14.0** **15.0** **17.0** **19.0** **21.0** **24.0**	21400 19600 17000 15000 13000 11600 10300 9460 8230 7260	178.20 162.96 141.80 125.14 108.49 96.53 85.80 78.46 68.28 60.25	88200 95000 102800 107900 112100 111300 109300 107600 104900 102300	0.85 0.90 1.05 1.20 1.40 1.55 1.75 1.90 2.20 2.50	GFA 157 GFAF 157 GF 157 GFF 157	Y..180M-4 AM180 AD5
28.0	6290	52.24	99400	2.90	GFA 157 GFAF 157 GF 157 GFF 157	Y..180M-4 AM180 AD6
13.0 **15.0** **17.0** **19.0**	13700 11900 10500 9090	114.34 98.95 87.31 75.41	82200 81700 80900 79700	0.85 1.00 1.15 1.30	GFA 127 GFAF 127 GF 127 GFF 127	Y..180M-4 AM180 AD4
21.0 **23.0** **26.0** **30.0**	8450 7700 6660 5880	70.07 63.91 55.31 48.80	79000 78100 76400 74900	1.40 1.55 1.80 2.00	GFA 127 GFAF 127 GF 127 GFF 127	Y..180M-4 AM180 AD5
20.0 **22.0** **25.0** **29.0**	8980 8150 7000 6110	74.52 67.62 58.12 50.73	46200 48500 48700 48400	0.85 0.95 1.10 1.25	GFA 107 GFAF 107 GF 107 GFF 107	Y..180M-4 AM180 AD4
34.0 **39.0** **46.0**	5180 4530 3830	43.03 37.61 31.80	47700 47000 46000	1.50 1.70 2.00	GFA 107 GFAF 107 GF 107 GFF 107	Y..180M-4 AM180 AD5
43.0 **53.0** **58.0** **67.0**	4070 3320 3030 2620	33.79 27.57 25.14 21.76	46400 45000 44300 43200	1.80 2.40 2.60 3.00	GFA 107 GFAF 107 GF 107 GFF 107	Y..180M-4 AM180 AD6

n_2 [1/min]	M_2 [Nm]	i	Fr [N]	K	Frame size	Input Configuration
P_1=18.5kw						
38.0	4680	38.86	20000	0.90	GFA 97 GFAF 97 GF 97 GFF 97	Y..180M-4 AM180 AD4
45.0	3910	32.50	20600	1.10		
53.0	3300	27.44	20900	1.30	GFA 97 GFAF 97 GF 97 GFF 97	Y..180M-4 AM180 AD5
59.0	3000	24.92	20900	1.45		
66.0	2660	22.11	20900	1.60		
73.0	2410	20.07	20800	1.80		
85.0	2070	17.25	20500	2.10		
97.0	1810	15.06	20200	2.40		
115	1530	12.77	19800	2.80	GFA 97 GFAF 97 GF 97 GFF 97	Y..180M-4 AM180 AD6
131	1340	11.16	19300	3.00		
69.0	2570	21.32	10900	1.15	GFA 87 GFAF 87 GF 87 GFF 87	Y..180M-4 AM180 AD5
76.0	2320	19.31	11100	1.30		
86.0	2060	17.12	11400	1.45		
95.0	1860	15.48	11500	1.60		
112	1580	13.12	11600	1.90		
128	1380	11.46	11600	2.20		
153	1150	9.58	11500	2.50		
177	990	8.29	10900	1.55		
199	880	7.35	10800	1.75		
220	800	6.65	10700	1.90		
260	675	5.63	10400	2.20		
298	590	4.92	10200	2.60		
356	495	4.12	9900	2.90		
P_1=22.0kw						
10.0	20100	141.80	93100	0.90	GFA 157 GFAF 157 GF 157 GFF 157	Y..180L-4 AM180 AD5
12.0	17800	125.14	100800	1.00		
14.0	15400	108.49	107000	1.15		
15.0	13700	96.53	106900	1.30		
17.0	12200	85.80	105200	1.45		
19.0	11100	78.46	103900	1.60		
22.0	9720	68.28	101600	1.85		
24.0	8580	60.25	99500	2.10		
28.0	7440	52.24	96800	2.40	GFA 157 GFAF 157 GF 157 GFF 157	Y..180L-4 AM180 AD6
32.0	6610	46.48	94600	2.70	GFA 157 GFAF 157 GF 157 GFF 157	Y..180L-4 AM180 AD7
37.0	5700	40.06	91800	3.20		
45.0	4630	32.55	87700	3.90		
15.0	14000	98.95	76300	0.85	GFA 127 GFAF 127 GF 127 GFF 127	Y..180L-4 AM180 AD4
17.0	12400	87.31	76300	0.95		
20.0	10700	75.41	75700	1.10		
21.0	9980	70.07	75300	1.20	GFA 127 GFAF 127 GF 127 GFF 127	Y..180L-4 AM180 AD5
23.0	9100	63.91	74600	1.30		
27.0	7870	55.31	73400	1.50		

n_2 [1/min]	M_2 [Nm]	i	Fr [N]	K	Frame size	Input Configuration
P_1=22.0kw						
30.0	6950	48.80	72200	1.75	GFA 127 GFAF 127 GF 127 GFF 127	Y..180L-4 AM180 AD5
35.0	6000	42.15	70600	2.00		
25.0	8270	58.12	45200	0.95	GFA 107 GFAF 107 GF 107 GFF 107	Y..180L-4 AM180 AD4
29.0	7220	50.73	45300	1.05		
34.0	6120	43.03	45100	1.25	GFA 107 GFAF 107 GF 107 GFF 107	Y..180L-4 AM180 AD5
39.0	5350	37.61	44700	1.45		
46.0	4520	31.80	44000	1.70		
44.0	4810	33.79	44300	1.55	GFA 107 GFAF 107 GF 107 GFF 107	Y..180L-4 AM180 AD6
54.0	3920	27.57	43300	2.00		
59.0	3580	25.14	42700	2.20		
68.0	3090	21.76	41800	2.50		
77.0	2730	19.20	40900	2.90		
54.0	3900	27.44	18700	1.10	GFA 97 GFAF 97 GF 97 GFF 97	Y..180L-4 AM180 AD5
59.0	3540	24.92	18900	1.20		
67.0	3140	22.11	19100	1.35		
74.0	2850	20.07	19200	1.50		
86.0	2450	17.25	19100	1.75		
98.0	2140	15.06	19000	2.00		
116	1810	12.77	18700	2.40	GFA 97 GFAF 97 GF 97 GFF 97	Y..180L-4 AM180 AD6
132	1580	11.16	18400	2.60		
69.0	3030	21.32	9020	1.00	GFA 87 GFAF 87 GF 87 GFF 87	Y..180L-4 AM180 AD5
76.0	2740	19.31	9450	1.10		
86.0	2430	17.12	9870	1.25		
95.0	2200	15.48	10100	1.35		
112	1860	13.12	10400	1.60		
129	1630	11.46	10600	1.85		
154	1360	9.58	10600	2.10		
178	1180	8.29	10100	1.30		
201	1040	7.35	10100	1.45		
222	940	6.65	10000	1.60		
262	800	5.63	9890	1.90		
300	700	4.92	9740	2.20		
358	585	4.12	9490	2.50		
P_1=30.0kw						
14.0	21000	108.49	89800	0.85	GFA 157 GFAF 157 GF 157 GFF 157	Y..200L-4 AM200 AD5
15.0	18700	96.53	96900	0.95		
17.0	16600	85.80	96400	1.10		
19.0	15200	78.46	95800	1.20		
22.0	13200	68.28	94600	1.35		
24.0	11700	60.25	93200	1.55		
28.0	10100	52.24	91400	1.75	GFA 157 GFAF 157 GF 157 GFF 157	Y..200L-4 AM200 AD6

n_2 [1/min]	M_2 [Nm]	i	Fr [N]	K	Frame size	Input Configuration
P_1=30.0kw						
32.0 37.0	9020 7780	46.48 40.06	89800 87600	2.00 2.30	GFA 157 GFAF 157 GF 157 GFF 157	Y..200L-4 AM200 AD7
20.0	14600	75.41	64500	0.80	GFA 127 GFAF 127 GF 127 GFF 127	Y..200L-4 AM200 AD4
21.0 23.0 27.0 30.0 35.0	13600 12400 10700 9470 8180	70.07 63.91 55.31 48.80 42.15	65700 66800 66700 66300 65500	0.90 0.95 1.10 1.25 1.45	GFA 127 GFAF 127 GF 127 GFF 127	Y..200L-4 AM200 AD5
40.0 55.0 60.0	7240 5210 4770	37.28 26.86 24.57	64700 61800 60800	1.65 1.65 1.80	GFA 127 GFAF 127 GF 127 GFF 127	Y..200L-4 AM200 AD6
47.0 58.0	6080 4910	31.33 25.30	63200 61100	1.95 2.40	GFA 127 GFAF 127 GF 127 GFF 127	Y..200L-4 AM200 AD7
69.0 78.0	4150 3660	21.38 18.87	59300 57900	2.90 3.00	GFA 127 GFAF 127 GF 127 GFF 127	Y..200L-4 AM200 AD8
34.0 39.0 46.0	8350 7300 6170	43.03 37.61 31.80	39200 39600 39700	0.90 1.05 1.25	GFA 107 GFAF 107 GF 107 GFF 107	Y..200L-4 AM200 AD5
54.0 59.0 68.0 77.0 89.0 101 120 148	5350 4880 4220 3720 3220 2840 2390 1930	27.57 25.14 21.76 19.20 16.58 14.67 12.33 9.96	39500 39300 38800 38300 37600 36900 35800 34400	1.45 1.60 1.85 2.10 2.40 2.70 2.90 3.40	GFA 107 GFAF 107 GF 107 GFF 107	Y..200L-4 AM200 AD6
67.0 74.0 86.0 98.0	4290 3890 3350 2920	22.11 20.07 17.25 15.06	15100 15500 16000 16300	1.00 1.10 1.30 1.45	GFA 97 GFAF 97 GF 97 GFF 97	Y..200L-4 AM200 AD5
116 132 163 179 209 239 282 322	2480 2160 1760 1590 1370 1190 1010 880	12.77 11.16 9.06 8.22 7.07 6.17 5.23 4.57	16400 16400 15400 15300 15100 14900 14600 14300	1.75 1.90 1.35 1.50 1.70 1.90 2.10 2.30	GFA 97 GFAF 97 GF 97 GFF 97	Y..200L-4 AM200 AD6

n_2 [1/min]	M_2 [Nm]	i	Fr [N]	K	Frame size	Input Configuration
P_1=37.0kw						
17.0 19.0 22.0 25.0	20500 18700 16300 14400	85.80 78.46 68.28 60.25	88600 88700 88400 87800	0.90 0.95 1.10 1.25	GFA 157 GFAF 157 GF 157 GFF 157	Y..225S-4 AM225 AD5
28.0	12400	52.24	86700	1.45	GFA 157 GFAF 157 GF 157 GFF 157	Y..225S-4 AM225 AD6
32.0 37.0 45.0	11100 9580 7780	46.48 40.06 32.55	85600 84000 81300	1.60 1.90 2.30	GFA 157 GFAF 157 GF 157 GFF 157	Y..225S-4 AM225 AD7
54.0	6600	27.60	79000	2.70	GFA 157 GFAF 157 GF 157 GFF 157	Y..225S-4 AM225 AD8
27.0 30.0 35.0	13200 11600 10000	55.31 48.80 42.15	59200 60800 61100	0.90 1.05 1.20	GFA 127 GFAF 127 GF 127 GFF 127	Y..225S-4 AM225 AD5
40.0 55.0 60.0	8910 6420 5870	37.28 26.86 24.57	60700 58900 58200	1.35 1.30 1.45	GFA 127 GFAF 127 GF 127 GFF 127	Y..225S-4 AM225 AD6
47.0 58.0	7490 6050	31.33 25.30	59900 58500	1.60 2.00	GFA 127 GFAF 127 GF 127 GFF 127	Y..225S-4 AM225 AD7
69.0 78.0 90.0 102 118 145 167 187	5110 4510 3910 3480 3000 2430 2110 1880	21.38 18.87 16.36 14.55 12.54 10.19 8.86 7.88	57100 55900 54500 53400 51800 49600 47700 46400	2.40 2.40 2.80 3.20 3.30 3.90 3.30 3.20	GFA 127 GFAF 127 GF 127 GFF 127	Y..225S-4 AM225 AD8
54.0 59.0 68.0 77.0 89.0 101 120 148 152 176 199 237	6590 6010 5200 4590 3960 3500 2940 2380 2310 2000 1770 1480	27.57 25.14 21.76 19.20 16.58 14.67 12.33 9.96 9.69 8.37 7.40 6.22	36200 36300 36200 36000 35600 35100 34300 33200 32400 31700 31000 30000	1.20 1.30 1.50 1.70 2.00 2.20 2.40 2.70 2.10 2.40 2.60 3.10	GFA 107 GFAF 107 GF 107 GFF 107	Y..225S-4 AM225 AD6

n_2 [1/min]	M_2 [Nm]	i	Fr [N]	K	Frame size	Input Configuration
P_1=45.0kw						
22.0	19800	68.28	81400	0.90	GFA 157 GFAF 157 GF 157 GFF 157	Y..225M-4 AM225 AD5
25.0	17500	60.25	81600	1.05		
28.0	15100	52.24	81300	1.20	GFA 157 GFAF 157 GF 157 GFF 157	Y..225M-4 AM225 AD6
32.0	13500	46.48	80800	1.35	GFA 157 GFAF 157 GF 157 GFF 157	Y..225M-4 AM225 AD7
37.0	11600	40.06	79800	1.55		
45.0	9460	32.55	78000	1.90		
54.0	8020	27.60	76200	2.20	GFA 157 GFAF 157 GF 157 GFF 157	Y..225M-4 AM225 AD8
30.0	14100	48.80	51600	0.85	GFA 127 GFAF 127 GF 127 GFF 127	Y..225M-4 AM225 AD5
35.0	12200	42.15	54300	1.00		
40.0	10800	37.28	55800	1.10	GFA 127 GFAF 127 GF 127 GFF 127	Y..225M-4 AM225 AD6
55.0	7810	26.86	55700	1.10		
60.0	7140	24.57	55300	1.20		
47.0	9100	31.33	56100	1.30	GFA 127 GFAF 127 GF 127 GFF 127	Y..225M-4 AM225 AD7
58.0	7350	25.30	55400	1.65		
69.0	6210	21.38	54500	1.95	GFA 127 GFAF 127 GF 127 GFF 127	Y..225M-4 AM225 AD8
78.0	5480	18.87	53600	2.00		
90.0	4750	16.36	52600	2.30		
102	4230	14.55	51600	2.60		
118	3640	12.54	50300	2.70		
145	2960	10.19	48300	3.20		
167	2570	8.86	46500	2.70		
187	2290	7.88	45400	2.60		
218	1970	6.80	44000	3.50		
268	1600	5.52	42000	3.70		
54.0	8010	27.57	31500	1.00	GFA 107 GFAF 107 GF 107 GFF 107	Y..225M-4 AM225 AD6
59.0	7310	25.14	32600	1.05		
68.0	6320	21.76	33200	1.25		
77.0	5580	19.20	33300	1.40		
89.0	4820	16.58	33300	1.65		
101	4260	14.67	33100	1.80		
120	3580	12.33	32600	1.95		
148	2890	9.96	31900	2.20		
152	2810	9.69	30900	1.75		
177	2430	8.37	30400	1.95		
200	2150	7.40	29900	2.10		
238	1800	6.22	29000	2.50		

n_2 [1/min]	M_2 [Nm]	i	Fr [N]	K	Frame size	Input Configuration
P_1=55.0kw						
24.0	21400	60.25	73800	0.85	GFA 157 GFAF 157 GF 157 GFF 157	Y..250M-4 AM250 AD5
28.0	18600	52.24	74600	0.95	GFA 157 GFAF 157 GF 157 GFF 157	Y..250M-4 AM250 AD6
32.0	16500	46.48	74800	1.10	GFA 157 GFAF 157 GF 157 GFF 157	Y..250M-4 AM250 AD7
37.0	14200	40.06	74700	1.25		
45.0	11500	32.55	73800	1.55		
53.0	9820	27.60	72600	1.85	GFA 157 GFAF 157 GF 157 GFF 157	Y..250M-4 AM250 AD8
52.0	10100	28.60	72900	1.65		
58.0	9050	25.43	71900	1.65		
67.0	7890	22.16	70600	2.30		
75.0	7030	19.77	69400	2.40		
88.0	6000	16.85	67600	3.00		
40.0	13200	37.28	46900	0.90	GFA 127 GFAF 127 GF 127 GFF 127	Y..250M-4 AM250 AD6
47.0	11100	31.33	49900	1.10	GFA 127 GFAF 127 GF 127 GFF 127	Y..250M-4 AM250 AD7
58.0	9010	25.30	51600	1.35		
69.0	7610	21.38	51300	1.60	GFA 127 GFAF 127 GF 127 GFF 127	Y..250M-4 AM250 AD8
78.0	6710	18.87	50800	1.65		
90.0	5820	16.36	50100	1.90		
101	5180	14.55	49400	2.10		
118	4460	12.54	48400	2.20		
145	3620	10.19	46800	2.60		
166	3150	8.86	45100	2.20		
187	2800	7.88	44200	2.10		
217	2410	6.80	42900	2.90		
315	1660	4.68	39600	3.60		
P_1=75.0kw						
32.0	22400	46.48	62900	0.80	GFA 157 GFAF 157 GF 157 GFF 157	Y..280S-4 AM280 AD7
37.0	19300	40.06	64400	0.95		
45.0	15700	32.55	65400	1.15		
54.0	13300	27.60	65500	1.35	GFA 157 GFAF 157 GF 157 GFF 157	Y..280S-4 AM280 AD8
52.0	13800	28.60	65500	1.25		
58.0	12300	25.43	65400	1.20		
67.0	10700	22.16	64900	1.70		
75.0	9560	19.77	64300	1.80		
88.0	8150	16.85	63200	2.20		
106	6750	13.96	61600	2.50		
124	5760	11.92	60100	2.80		

n_2 [1/min]	M_2 [Nm]	i	Fr [N]	K	Frame size	Input Configuration
P_1=75.0kw						
58.0	12200	25.30	40000	1.00	GFA 127 GFAF 127 GF 127 GFF 127	Y..280S-4 AM280 AD7
69.0	10300	21.38	43000	1.15	GFA 127 GFAF 127 GF 127 GFF 127	Y..280S-4 AM280 AD8
78.0	9120	18.87	44400	1.20		
90.0	7910	16.36	45200	1.40		
102	7040	14.55	45000	1.55		
118	6060	12.54	44600	1.65		
145	4930	10.19	43700	1.95		
167	4280	8.86	42200	1.65		
188	3810	7.88	41600	1.55		
218	3280	6.80	40700	2.10		
268	2670	5.52	39300	2.20		
316	2260	4.68	38100	2.60		
P_1=90.0kw						
45.0	18900	32.55	59100	0.95	GFA 157 GFAF 157 GF 157 GFF 157	Y..280M-4 AM280 AD7
54.0	16000	27.60	60200	1.10	GFA 157 GFAF 157 GF 157 GFF 157	Y..280M-4 AM280 AD8
67.0	12800	22.16	60600	1.40		
75.0	11400	19.77	60500	1.50		
88.0	9780	16.85	59900	1.85		
106	8100	13.96	58900	2.10		
124	6920	11.92	57800	2.30		

n_2 [1/min]	M_2 [Nm]	i	Fr [N]	K	Frame size	Input Configuration
P_1=90.0kw						
58.0	14600	25.30	29600	0.80	GFA 127 GFAF 127 GF 127 GFF 127	Y..280M-4 AM280 AD7
90.0	9490	16.36	39900	1.15	GFA 127 GFAF 127 GF 127 GFF 127	Y..280M-4 AM280 AD8
102	8450	14.55	41100	1.30		
118	7280	12.54	41800	1.35		
145	5910	10.19	41400	1.60		
167	5140	8.86	40100	1.35		
188	4570	7.88	39700	1.30		
218	3940	6.80	39000	1.75		
268	3200	5.52	37900	1.85		
316	2710	4.68	36900	2.20		
P_1=110kw						
54.0	19500	27.60	53100	0.90	GFA 157 GFAF 157 GF 157 GFF 157	Y..315S-4 - AD8
67.0	15600	22.16	54900	1.15		
75.0	14000	19.77	55400	1.20		
88.0	11900	16.85	55600	1.50		
106	9890	13.96	55300	1.70		
124	8440	11.92	54700	1.90		
P_1=132kw						
67.0	18800	22.16	48700	0.95	GFA 157 GFAF 157 GF 157 GFF 157	Y..315M-4 - AD8
75.0	16700	19.77	49800	1.00		
88.0	14300	16.85	50900	1.25		
106	11800	13.96	51400	1.45		
125	10100	11.92	51400	1.60		

3．8 GF../GRF..性能参数 / GF../GRF.. Performance Parameters

n_2 [1/min]	i	Fr [N]	Frame size		Motor
M_{2max}=130Nm					
0.15	8972	4500			
0.18	7736	4500			
0.19	7211	4500			
0.22	6303	4500			
0.25	5435	4500	GFA	27 GRF17	Y..63M$_1$-4
0.28	4855	4500	GFAF	27 GRF17	Y..63M$_1$-4
0.33	4243	4500	GF	27 GRF17	Y..63M$_1$-4
0.37	3715	4500	GFF	27 GRF17	Y..63M$_1$-4
0.43	3247	4500			
0.48	2878	4500			
0.55	2515	4500			
0.62	2217	4500			
0.73	1898	4500			
0.84	1645	4500			
0.90	1525	4500			
1.00	1322	4500	GFA	27 GRF17	Y..63M$_1$-4
1.20	1146	4500	GFAF	27 GRF17	Y..63M$_1$-4
1.40	1013	4500	GF	27 GRF17	Y..63M$_1$-4
1.60	890	4500	GFF	27 GRF17	Y..63M$_1$-4
1.80	778	4500			
2.00	682	4500			
2.30	602	4500			
2.60	520	4500			
3.00	458	4500			
3.50	397	4500			
4.00	342	4500	GFA	27 GRF17	Y..63M$_1$-4
4.60	302	4500	GFAF	27 GRF17	Y..63M$_1$-4
5.20	266	4500	GF	27 GRF17	Y..63M$_1$-4
5.80	236	4500	GFF	27 GRF17	Y..63M$_1$-4
6.50	211	4500			
7.40	186	4500			
			GFA	27 GRF17	Y..63M$_2$-4
9.30	142	4500	GFAF	27 GRF17	Y..63M$_2$-4
11.0	124	4500	GF	27 GRF17	Y..63M$_2$-4
			GFF	27 GRF17	Y..63M$_2$-4
			GFA	27 GRF17	Y..71M$_1$-4
12.0	109	4500	GFAF	27 GRF17	Y..71M$_1$-4
14.0	96	4500	GF	27 GRF17	Y..71M$_1$-4
			GFF	27 GRF17	Y..71M$_1$-4
M_{2max}=200Nm					
0.17	8193	4290			
0.20	7064	4290			
0.21	6585	4290			
0.24	5756	4290			
0.28	4963	4290	GFA	37 GRF17	Y..63M$_1$-4
0.31	4434	4290	GFAF	37 GRF17	Y..63M$_1$-4
0.36	3875	4290	GF	37 GRF17	Y..63M$_1$-4
0.41	3392	4290	GFF	37 GRF17	Y..63M$_1$-4
0.47	2965	4290			
0.53	2587	4290			
0.60	2284	4290			
0.69	1997	4290			

n_2 [1/min]	i	Fr [N]	Frame size		Motor
M_{2max}=200Nm					
0.72	1929	4290			
0.82	1679	4290			
0.89	1550	4290			
1.00	1356	4290			
1.20	1180	4290			
1.30	1044	4290	GFA	37 GRF17	Y..63M$_1$-4
1.50	914	4290	GFAF	37 GRF17	Y..63M$_1$-4
1.70	808	4290	GF	37 GRF17	Y..63M$_1$-4
2.00	698	4290	GFF	37 GRF17	Y..63M$_1$-4
2.20	616	4290			
2.50	544	4290			
3.00	466	4290			
3.40	411	4290			
3.80	364	4290			
			GFA	37 GRF17	Y..63M$_1$-4
4.20	326	4290	GFAF	37 GRF17	Y..63M$_1$-4
4.80	285	4290	GF	37 GRF17	Y..63M$_1$-4
			GFF	37 GRF17	Y..63M$_1$-4
			GFA	37 GRF17	Y..63M$_2$-4
5.30	250	4290	GFAF	37 GRF17	Y..63M$_2$-4
6.00	219	4290	GF	37 GRF17	Y..63M$_2$-4
7.10	186	4290	GFF	37 GRF17	Y..63M$_2$-4
			GFA	37 GRF17	Y..71M$_1$-4
7.80	167	4290	GFAF	37 GRF17	Y..71M$_1$-4
8.90	145	4290	GF	37 GRF17	Y..71M$_1$-4
10.0	129	4290	GFF	37 GRF17	Y..71M$_1$-4
M_{2max}=400Nm					
0.11	12251	5920			
0.13	10619	5920			
0.14	9846	5920			
0.16	8534	5920			
0.19	7460	5920			
0.21	6536	5920	GFA	47 GRF17	Y..63M$_1$-4
0.24	5746	5920	GFAF	47 GRF17	Y..63M$_1$-4
0.27	5022	5920	GF	47 GRF17	Y..63M$_1$-4
0.31	4401	5920	GFF	47 GRF17	Y..63M$_1$-4
0.36	3883	5920			
0.40	3443	5920			
0.46	2976	5920			
0.52	2629	5920			
0.55	2519	5920			
0.58	2394	5920			
0.64	2172	5920			
0.68	2025	5920			
0.78	1770	5920	GFA	47 GRF17	Y..63M$_1$-4
0.88	1576	5920	GFAF	47 GRF17	Y..63M$_1$-4
1.00	1363	5920	GF	47 GRF17	Y..63M$_1$-4
1.20	1192	5920	GFF	47 GRF17	Y..63M$_1$-4
1.30	1061	5920			
1.50	931	5920			
1.70	822	5920			
2.00	706	5920			

n_2 [1/min]	i	Fr [N]	Frame size		Motor
M_{2max}=400Nm					
2.20	619	5920	GFA GFAF GF GFF	47 GRF17 47 GRF17 47 GRF17 47 GRF17	Y..63M1-4 Y..63M1-4 Y..63M1-4 Y..63M1-4
2.50 2.70 3.10 3.50	524 489 427 381	5920 5920 5920 5920	GFA GFAF GF GFF	47 GRF17 47 GRF17 47 GRF17 47 GRF17	Y..63M2-4 Y..63M2-4 Y..63M2-4 Y..63M2-4
3.90 4.40 5.10	334 295 253	5920 5920 5920	GFA GFAF GF GFF	47 GRF17 47 GRF17 47 GRF17 47 GRF17	Y..71M1-4 Y..71M1-4 Y..71M1-4 Y..71M1-4
6.40 7.30 7.80	217 190 178	5920 5920 5920	GFA GFAF GF GFF	47 GRF17 47 GRF17 47 GRF17 47 GRF17	Y..71M2-4 Y..71M2-4 Y..71M2-4 Y..71M2-4
9.20 11.0	149 131	5920 5920	GFA GFAF GF GFF	47 GRF17 47 GRF17 47 GRF17 47 GRF17	Y..80M1-4 Y..80M1-4 Y..80M1-4 Y..80M1-4
M_{2max}=600Nm					
0.09 0.10 0.11 0.12 0.14 0.16 0.17 0.20 0.23 0.26 0.30 0.34 0.39 0.44	14832 13604 12602 11252 9986 8787 7908 6913 6030 5289 4654 4060 3564 3161	9200 9200 9200 9200 9200 9200 9200 9200 9200 9200 9200 9200 9200 9200	GFA GFAF GF GFF	57 GRF37 57 GRF37 57 GRF37 57 GRF37	Y..63M1-4 Y..63M1-4 Y..63M1-4 Y..63M1-4
0.48 0.54 0.61 0.69 0.77 0.85 0.97 1.10 1.30 1.40 1.60	2854 2576 2266 2012 1791 1617 1422 1243 1066 949 856	9200 9200 9200 9200 9200 9200 9200 9200 9200 9200 9200	GFA GFAF GF GFF	57 GRF37 57 GRF37 57 GRF37 57 GRF37	Y..63M1-4 Y..63M1-4 Y..63M1-4 Y..63M1-4
1.80 2.00 2.40	749 658 549	9200 9200 9200	GFA GFAF GF GFF	57 GRF37 57 GRF37 57 GRF37 57 GRF37	Y..63M2-4 Y..63M2-4 Y..63M2-4 Y..63M2-4

n_2 [1/min]	i	Fr [N]	Frame size		Motor
M_{2max}=600Nm					
2.70	483	9200	GFA GFAF GF GFF	57 GRF37 57 GRF37 57 GRF37 57 GRF37	Y..71M1-4 Y..71M1-4 Y..71M1-4 Y..71M1-4
3.00 3.40	426 382	9200 9200	GFA GFAF GF GFF	57 GRF37 57 GRF37 57 GRF37 57 GRF37	Y..71M1-4 Y..71M1-4 Y..71M1-4 Y..71M1-4
4.20 4.60 5.30	330 298 262	9200 9200 9200	GFA GFAF GF GFF	57 GRF37 57 GRF37 57 GRF37 57 GRF37	Y..71M2-4 Y..71M2-4 Y..71M2-4 Y..71M2-4
6.10 6.90	226 200	9200 9200	GFA GFAF GF GFF	57 GRF37 57 GRF37 57 GRF37 57 GRF37	Y..80M1-4 Y..80M1-4 Y..80M1-4 Y..80M1-4
8.40 9.40 11.0	170 152 134	9200 9200 9200	GFA GFAF GF GFF	57 GRF37 57 GRF37 57 GRF37 57 GRF37	Y..80M2-4 Y..80M2-4 Y..80M2-4 Y..80M2-4
M_{2max}=820Nm					
0.07 0.08 0.09 0.11 0.12 0.14 0.15 0.17 0.19 0.23 0.26 0.29 0.34 0.39 0.44 0.50 0.57	19199 17610 14992 12926 11480 10220 8933 7940 7096 6080 5341 4690 4091 3574 3133 2756 2439	10300 10300 10300 10300 10300 10300 10300 10300 10300 10300 10300 10300 10300 10300 10300 10300 10300	GFA GFAF GF GFF	67 GRF37 67 GRF37 67 GRF37 67 GRF37	Y..63M1-4 Y..63M1-4 Y..63M1-4 Y..63M1-4
0.41 0.47 0.51 0.58 0.65 0.85 0.96 1.10	3377 2912 2714 2372 2126 1631 1437 1256	10300 10300 10300 10300 10300 10300 10300 10300	GFA GFAF GF GFF	67 GRF37 67 GRF37 67 GRF37 67 GRF37	Y..63M1-4 Y..63M1-4 Y..63M1-4 Y..63M1-4
1.20 1.30 1.50	1126 984 864	10300 10300 10300	GFA GFAF GF GFF	67 GRF37 67 GRF37 67 GRF37 67 GRF37	Y..63M2-4 Y..63M2-4 Y..63M2-4 Y..63M2-4

n_2 [1/min]	i	Fr [N]	Frame size		Motor
M_{2max}=820Nm					
1.80	722	10300	GFA	67 GRF37	Y..71M1-4
2.00	634	10300	GFAF	67 GRF37	Y..71M1-4
2.40	539	10300	GF	67 GRF37	Y..71M1-4
			GFF	67 GRF37	Y..71M1-4
0.73	1884	10300	GFA	67 GRF37	Y..63M1-4
			GFAF	67 GRF37	Y..63M1-4
			GF	67 GRF37	Y..63M1-4
			GFF	67 GRF37	Y..63M1-4
2.60	500	10300	GFA	67 GRF37	Y..71M1-4
			GFAF	67 GRF37	Y..71M1-4
			GF	67 GRF37	Y..71M1-4
			GFF	67 GRF37	Y..71M1-4
3.00	454	10300	GFA	67 GRF37	Y..71M2-4
3.50	392	10300	GFAF	67 GRF37	Y..71M2-4
			GF	67 GRF37	Y..71M2-4
			GFF	67 GRF37	Y..71M2-4
4.10	333	10300	GFA	67 GRF37	Y..80M1-4
4.60	297	10300	GFAF	67 GRF37	Y..80M1-4
5.30	261	10300	GF	67 GRF37	Y..80M1-4
5.80	238	10300	GFF	67 GRF37	Y..80M1-4
7.20	200	10300	GFA	67 GRF37	Y..80M2-4
			GFAF	67 GRF37	Y..80M2-4
			GF	67 GRF37	Y..80M2-4
			GFF	67 GRF37	Y..80M2-4
M_{2max}=1500Nm					
0.07	19180	15700	GFA	77 GRF37	Y..63M1-4
0.08	17593	15700	GFAF	77 GRF37	Y..63M1-4
0.09	16128	15700	GF	77 GRF37	Y..63M1-4
0.09	14978	15700	GFF	77 GRF37	Y..63M1-4
0.10	13731	15700			
0.11	12049	15700			
0.13	11035	15700			
0.14	9683	15700			
0.16	8464	15700			
0.18	7520	15700			
0.21	6580	15700			
0.24	5808	15700			
0.27	5026	15700			
0.31	4435	15700	GFA	77 GRF37	Y..63M1-4
0.36	3832	15700	GFAF	77 GRF37	Y..63M1-4
0.46	2978	15700	GF	77 GRF37	Y..63M1-4
0.53	2613	15700	GFF	77 GRF37	Y..63M1-4
0.60	2284	15700			
0.65	2029	15700	GFA	77 GRF37	Y..63M2-4
0.76	1728	15700	GFAF	77 GRF37	Y..63M2-4
0.86	1544	15700	GF	77 GRF37	Y..63M2-4
0.98	1354	15700	GFF	77 GRF37	Y..63M2-4
1.10	1200	15700	GFA	77 GRF37	Y..71M1-4
1.20	1053	15700	GFAF	77 GRF37	Y..71M1-4
			GF	77 GRF37	Y..71M1-4
			GFF	77 GRF37	Y..71M1-4

n_2 [1/min]	i	Fr [N]	Frame size		Motor
M_{2max}=1500Nm					
1.50	910	15700	GFA	77 GRF37	Y..71M2-4
1.70	810	15700	GFAF	77 GRF37	Y..71M2-4
1.90	710	15700	GF	77 GRF37	Y..71M2-4
			GFF	77 GRF37	Y..71M2-4
2.20	615	15700	GFA	77 GRF37	Y..80M1-4
2.60	538	15700	GFAF	77 GRF37	Y..80M1-4
2.90	480	15700	GF	77 GRF37	Y..80M1-4
			GFF	77 GRF37	Y..80M1-4
3.50	413	15700	GFA	77 GRF37	Y..80M2-4
3.90	367	15700	GFAF	77 GRF37	Y..80M2-4
			GF	77 GRF37	Y..80M2-4
			GFF	77 GRF37	Y..80M2-4
4.40	323	15700	GFA	77 GRF37	Y..90S-4
			GFAF	77 GRF37	Y..90S-4
			GF	77 GRF37	Y..90S-4
			GFF	77 GRF37	Y..90S-4
M_{2max}=3000Nm					
0.06	23042	19800	GFA	87 GRF57	Y..63M1-4
0.07	20462	19800	GFAF	87 GRF57	Y..63M1-4
0.08	18238	19800	GF	87 GRF57	Y..63M1-4
0.09	15877	19800	GFF	87 GRF57	Y..63M1-4
0.10	14099	19800			
0.11	12205	19800			
0.13	10433	19800			
0.15	9381	19800			
0.17	8142	19800			
0.19	7100	19800			
0.22	6273	19800			
0.25	5510	19800			
0.28	4954	19800			
0.31	4245	19800	GFA	87 GRF57	Y..63M2-4
0.35	3721	19800	GFAF	87 GRF57	Y..63M2-4
0.41	3244	19800	GF	87 GRF57	Y..63M2-4
0.46	2881	19800	GFF	87 GRF57	Y..63M2-4
0.50	2576	19800	GFA	87 GRF57	Y..71M1-4
0.59	2199	19800	GFAF	87 GRF57	Y..71M1-4
0.67	1930	19800	GF	87 GRF57	Y..71M1-4
			GFF	87 GRF57	Y..71M1-4
0.81	1709	19800	GFA	87 GRF57	Y..71M2-4
0.92	1493	19800	GFAF	87 GRF57	Y..71M2-4
			GF	87 GRF57	Y..71M2-4
			GFF	87 GRF57	Y..71M2-4
1.10	1300	19800	GFA	87 GRF57	Y..80M1-4
1.20	1148	19800	GFAF	87 GRF57	Y..80M1-4
1.40	1010	19800	GF	87 GRF57	Y..80M1-4
1.60	887	19800	GFF	87 GRF57	Y..80M1-4
1.80	780	19800	GFA	87 GRF57	Y..80M2-4
2.10	674	19800	GFAF	87 GRF57	Y..80M2-4
			GF	87 GRF57	Y..80M2-4
			GFF	87 GRF57	Y..80M2-4

n_2 [1/min]	i	Fr [N]	Frame size		Motor
M_{2max}=3000Nm					
2.30 2.80 3.10	609 515 452	19800 19800 19800	GFA GFAF GF GFF	87 GRF57 87 GRF57 87 GRF57 87 GRF57	Y..90S-4 Y..90S-4 Y..90S-4 Y..90S-4
4.10	345	19800	GFA GFAF GF GFF	87 GRF57 87 GRF57 87 GRF57 87 GRF57	Y..90L-4 Y..90L-4 Y..90L-4 Y..90L-4
M_{2max}=4300Nm					
0.07 0.08 0.09 0.10 0.11 0.13 0.14 0.17 0.19	20183 18119 15472 14022 12324 10838 9576 8318 7328	29900 29900 29900 29900 29900 29900 29900 29900 29900	GFA GFAF GF GFF	97 GRF57 97 GRF57 97 GRF57 97 GRF57	Y..63M$_1$-4 Y..63M$_1$-4 Y..63M$_1$-4 Y..63M$_1$-4
0.20 0.24 0.27 0.30 0.34	6469 5615 4961 4333 3906	29900 29900 29900 29900 29900	GFA GFAF GF GFF	97 GRF57 97 GRF57 97 GRF57 97 GRF57	Y..63M$_2$-4 Y..63M$_2$-4 Y..63M$_2$-4 Y..63M$_2$-4
0.39 0.45	3352 2907	29900 29900	GFA GFAF GF GFF	97 GRF57 97 GRF57 97 GRF57 97 GRF57	Y..71M$_1$-4 Y..71M$_1$-4 Y..71M$_1$-4 Y..71M$_1$-4
0.54 0.61 0.70	2553 2245 1970	29900 29900 29900	GFA GFAF GF GFF	97 GRF57 97 GRF57 97 GRF57 97 GRF57	Y..71M$_2$-4 Y..71M$_2$-4 Y..71M$_2$-4 Y..71M$_2$-4
0.80 0.90 1.00	1722 1527 1327	29900 29900 29900	GFA GFAF GF GFF	97 GRF57 97 GRF57 97 GRF57 97 GRF57	Y..80M$_1$-4 Y..80M$_1$-4 Y..80M$_1$-4 Y..80M$_1$-4
1.20 1.40	1171 1022	29900 29900	GFA GFAF GF GFF	97 GRF57 97 GRF57 97 GRF57 97 GRF57	Y..80M$_2$-4 Y..80M$_2$-4 Y..80M$_2$-4 Y..80M$_2$-4
1.60 1.80 2.10	898 784 690	29900 29900 29900	GFA GFAF GF GFF	97 GRF57 97 GRF57 97 GRF57 97 GRF57	Y..90S-4 Y..90S-4 Y..90S-4 Y..90S-4
2.40 2.70 3.10	605 529 467	29900 29900 29900	GFA GFAF GF GFF	97 GRF57 97 GRF57 97 GRF57 97 GRF57	Y..90L-4 Y..90L-4 Y..90L-4 Y..90L-4

n_2 [1/min]	i	Fr [N]	Frame size		Motor
M_{2max}=600Nm					
3.50 3.90	406 363	29900 29900	GFA GFAF GF GFF	97 GRF57 97 GRF57 97 GRF57 97 GRF57	Y..100L$_1$-4 Y..100L$_1$-4 Y..100L$_1$-4 Y..100L$_1$-4
5.10 6.00	285 245	29900 29900	GFA GFAF GF GFF	97 GRF57 97 GRF57 97 GRF57 97 GRF57	Y..100L$_2$-4 Y..100L$_2$-4 Y..100L$_2$-4 Y..100L$_2$-4
M_{2max}=7680Nm					
0.05 0.06 0.07 0.08 0.09	25375 21652 18933 16888 14767	49800 49800 49800 49800 49800	GFA GFAF GF GFF	107 GRF77 107 GRF77 107 GRF77 107 GRF77	Y..63M$_1$-4 Y..63M$_1$-4 Y..63M$_1$-4 Y..63M$_1$-4
0.12 0.13 0.15 0.17	11348 10039 8548 7674	49800 49800 49800 49800	GFA GFAF GF GFF	107 GRF77 107 GRF77 107 GRF77 107 GRF77	Y..63M$_2$-4 Y..63M$_2$-4 Y..63M$_2$-4 Y..63M$_2$-4
0.19 0.22 0.25	6767 5954 5223	9800 49800 49800	GFA GFAF GF GFF	107 GRF77 107 GRF77 107 GRF77 107 GRF77	Y..71M$_1$-4 Y..71M$_1$-4 Y..71M$_1$-4 Y..71M$_1$-4
0.30 0.39	4567 3521	49800 49800	GFA GFAF GF GFF	107 GRF77 107 GRF77 107 GRF77 107 GRF77	Y..71M$_2$-4 Y..71M$_2$-4 Y..71M$_2$-4 Y..71M$_2$-4
0.45 0.50 0.58	3037 2756 2369	49800 49800 49800	GFA GFAF GF GFF	107 GRF77 107 GRF77 107 GRF77 107 GRF77	Y..80M$_1$-4 Y..80M$_1$-4 Y..80M$_1$-4 Y..80M$_1$-4
0.69 0.79	2068 1826	49800 49800	GFA GFAF GF GFF	107 GRF77 107 GRF77 107 GRF77 107 GRF77	Y..80M$_2$-4 Y..80M$_2$-4 Y..80M$_2$-4 Y..80M$_2$-4
0.89 1.00 1.10	1597 1401 1243	49800 49800 49800	GFA GFAF GF GFF	107 GRF77 107 GRF77 107 GRF77 107 GRF77	Y..90S-4 Y..90S-4 Y..90S-4 Y..90S-4
1.30 1.50	1087 950	49800 49800	GFA GFAF GF GFF	107 GRF77 107 GRF77 107 GRF77 107 GRF77	Y..90L-4 Y..90L-4 Y..90L-4 Y..90L-4
1.70 1.90 2.20	834 736 640	49800 49800 49800	GFA GFAF GF GFF	107 GRF77 107 GRF77 107 GRF77 107 GRF77	Y..100L$_1$-4 Y..100L$_1$-4 Y..100L$_1$-4 Y..100L$_1$-4

n_2 [1/min]	i	Fr [N]	Frame size	Motor
M_{2max}=7680Nm				
2.60	560	49800	GFA 107 GRF77	Y..100L$_2$-4
3.00	489	49800	GFAF 107 GRF77	Y..100L$_2$-4
3.30	436	49800	GF 107 GRF77	Y..100L$_2$-4
			GFF 107 GRF77	Y..100L$_2$-4
4.00	370	49800	GFA 107 GRF77	Y..112M-4
4.40	333	49800	GFAF 107 GRF77	Y..112M-4
			GF 107 GRF77	Y..112M-4
			GFF 107 GRF77	Y..112M-4
M_{2max}=12000Nm				
0.06	24478	90000	GFA 127 GRF77	Y..63M$_1$-4
0.06	22323	90000	GFAF 127 GRF77	Y..63M$_1$-4
			GF 127 GRF77	Y..63M$_1$-4
			GFF 127 GRF77	Y..63M$_1$-4
0.07	19048	90000	GFA 127 GRF77	Y..63M$_2$-4
0.08	16656	90000	GFAF 127 GRF77	Y..63M$_2$-4
0.09	14722	90000	GF 127 GRF77	Y..63M$_2$-4
0.10	12912	90000	GFF 127 GRF77	Y..63M$_2$-4
0.11	11656	90000		
0.13	10191	90000	GFA 127 GRF77	Y..71M$_1$-4
0.15	8831	90000	GFAF 127 GRF77	Y..71M$_1$-4
			GF 127 GRF77	Y..71M$_1$-4
			GFF 127 GRF77	Y..71M$_1$-4
0.18	7643	90000	GFA 127 GRF77	Y..71M$_2$-4
0.21	6715	90000	GFAF 127 GRF77	Y..71M$_2$-4
0.23	5925	90000	GF 127 GRF77	Y..71M$_2$-4
			GFF 127 GRF77	Y..71M$_2$-4
0.27	5153	90000	GFA 127 GRF77	Y..80M$_1$-4
0.30	4533	90000	GFAF 127 GRF77	Y..80M$_1$-4
0.35	3926	90000	GF 127 GRF77	Y..80M$_1$-4
			GFF 127 GRF77	Y..80M$_1$-4
0.42	3454	90000	GFA 127 GRF77	Y..80M$_2$-4
0.47	3031	90000	GFAF 127 GRF77	Y..80M$_2$-4
0.54	2672	90000	GF 127 GRF77	Y..80M$_2$-4
			GFF 127 GRF77	Y..80M$_2$-4
0.60	2357	90000	GFA 127 GRF77	Y..90S-4
0.70	2038	90000	GFAF 127 GRF77	Y..90S-4
0.80	1784	90000	GF 127 GRF77	Y..90S-4
			GFF 127 GRF77	Y..90S-4
0.89	1606	90000	GFA 127 GRF77	Y..90L-4
1.00	1390	90000	GFAF 127 GRF77	Y..90L-4
			GF 127 GRF77	Y..90L-4
			GFF 127 GRF77	Y..90L-4
1.20	1220	90000	GFA 127 GRF77	Y..100L$_1$-4
1.30	1077	90000	GFAF 127 GRF77	Y..100L$_1$-4
1.50	930	90000	GF 127 GRF77	Y..100L$_1$-4
			GFF 127 GRF77	Y..100L$_1$-4

n_2 [1/min]	i	Fr [N]	Frame size	Motor
M_{2max}=12000Nm				
1.80	820	90000	GFA 127 GRF77	Y..100L$_2$-4
2.00	727	90000	GFAF 127 GRF77	Y..100L$_2$-4
			GF 127 GRF77	Y..100L$_2$-4
			GFF 127 GRF77	Y..100L$_2$-4
2.20	648	90000	GFA 127 GRF77	Y..112M-4
2.70	549	90000	GFAF 127 GRF77	Y..112M-4
3.00	495	90000	GF 127 GRF77	Y..112M-4
			GFF 127 GRF77	Y..112M-4
3.40	428	90000	GFA 127 GRF77	Y..132S-4
3.90	376	90000	GFAF 127 GRF77	Y..132S-4
			GF 127 GRF77	Y..132S-4
			GFF 127 GRF77	Y..132S-4
3.00	483	90000	GFA 127 GRF77	Y..132S-4
3.50	418	90000	GFAF 127 GRF77	Y..132S-4
3.90	374	90000	GF 127 GRF77	Y..132S-4
			GFF 127 GRF77	Y..132S-4
4.70	312	90000	GFA 127 GRF77	Y..132M-4
5.00	293	90000	GFAF 127 GRF77	Y..132M-4
			GF 127 GRF77	Y..132M-4
			GFF 127 GRF77	Y..132M-4
7.50	198	90000	GFA 127 GRF77	Y..160M-4
			GFAF 127 GRF77	Y..160M-4
			GF 127 GRF77	Y..160M-4
			GFF 127 GRF77	Y..160M-4
M_{2max}=18000Nm				
0.04	31434	100300		
0.05	26173	100300		
0.06	23464	100300	GFA 157 GRF97	Y..80M$_1$-4
0.07	20212	100300	GFAF 157 GRF97	Y..80M$_1$-4
0.08	17984	100300	GF 157 GRF97	Y..80M$_1$-4
0.08	16358	100300	GFF 157 GRF97	Y..80M$_1$-4
0.10	13751	100300		
0.11	12235	100300		
0.14	10033	100300	GFA 157 GRF97	Y..80M$_2$-4
0.16	9021	100300	GFAF 157 GRF97	Y..80M$_2$-4
0.18	8026	100300	GF 157 GRF97	Y..80M$_2$-4
			GFF 157 GRF97	Y..80M$_2$-4
0.20	7075	100300	GFA 157 GRF97	Y..80M$_1$-4
0.22	6295	100300	GFAF 157 GRF97	Y..80M$_1$-4
			GF 157 GRF97	Y..80M$_1$-4
			GFF 157 GRF97	Y..80M$_1$-4
0.27	5404	100300	GFA 157 GRF97	Y..80M$_2$-4
0.30	4831	100300	GFAF 157 GRF97	Y..80M$_2$-4
			GF 157 GRF97	Y..80M$_2$-4
			GFF 157 GRF97	Y..80M$_2$-4
0.34	4130	100300	GFA 157 GRF97	Y..90S-4
			GFAF 157 GRF97	Y..90S-4
			GF 157 GRF97	Y..90S-4
			GFF 157 GRF97	Y..90S-4

n_2 [1/min]	i	Fr [N]	Frame size	Motor
M_{2max}=18000Nm				
0.40 0.44	3607 3210	100300 100300	GFA 157 GRF97 GFAF 157 GRF97 GF 157 GRF97 GFF 157 GRF97	Y..100L1-4 Y..100L1-4 Y..100L1-4 Y..100L1-4
0.51	2780	100300	GFA 157 GRF97 GFAF 157 GRF97 GF 157 GRF97 GFF 157 GRF97	Y..90L-4 Y..90L-4 Y..90L-4 Y..90L-4
0.99	1441	100300	GFA 157 GRF97 GFAF 157 GRF97 GF 157 GRF97 GFF 157 GRF97	Y..100L1-4 Y..100L1-4 Y..100L1-4 Y..100L1-4
0.59 0.65	2427 2185	100300 100300	GFA 157 GRF97 GFAF 157 GRF97 GF 157 GRF97 GFF 157 GRF97	Y..90L-4 Y..90L-4 Y..90L-4 Y..90L-4
0.73 0.85	1944 1674	100300 100300	GFA 157 GRF97 GFAF 157 GRF97 GF 157 GRF97 GFF 157 GRF97	Y..100L1-4 Y..100L1-4 Y..100L1-4 Y..100L1-4
1.10 1.20	1308 1169	100300 100300	GFA 157 GRF97 GFAF 157 GRF97 GF 157 GRF97 GFF 157 GRF97	Y..100L2-4 Y..100L2-4 Y..100L2-4 Y..100L2-4

n_2 [1/min]	i	Fr [N]	Frame size	Motor
M_{2max}=18000Nm				
1.50 1.70 1.90	953 845 764	100300 100300 100300	GFA 157 GRF97 GFAF 157 GRF97 GF 157 GRF97 GFF 157 GRF97	Y..112M-4 Y..112M-4 Y..112M-4 Y..112M-4
2.10 2.50	680 576	100300 100300	GFA 157 GRF97 GFAF 157 GRF97 GF 157 GRF97 GFF 157 GRF97	Y..132S-4 Y..132S-4 Y..132S-4 Y..132S-4
2.90 3.30	503 446	100300 100300	GFA 157 GRF97 GFAF 157 GRF97 GF 157 GRF97 GFF 157 GRF97	Y..132M-4 Y..132M-4 Y..132M-4 Y..132M-4
4.90 5.40	302 273	100300 100300	GFA 157 GRF97 GFAF 157 GRF97 GF 157 GRF97 GFF 157 GRF97	Y..160M-4 Y..160M-4 Y..160M-4 Y..160M-4
6.30 7.20	232 202	100300 100300	GFA 157 GRF97 GFAF 157 GRF97 GF 157 GRF97 GFF 157 GRF97	Y..160L-4 Y..160L-4 Y..160L-4 Y..160L-4
7.50	197	100300	GFA 157 GRF97 GFAF 157 GRF97 GF 157 GRF97 GFF 157 GRF97	Y..180M-4 Y..180M-4 Y..180M-4 Y..180M-4

3.9 外形尺寸 / Dimensions

GF27

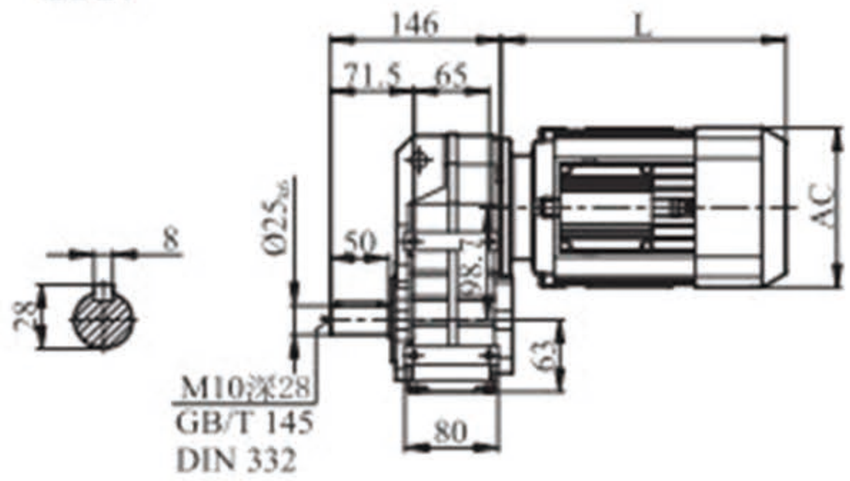

GFA27-T

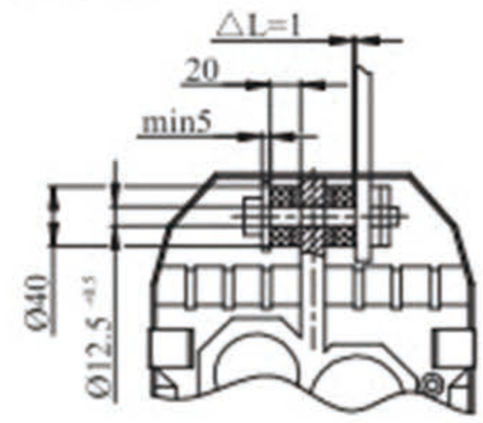

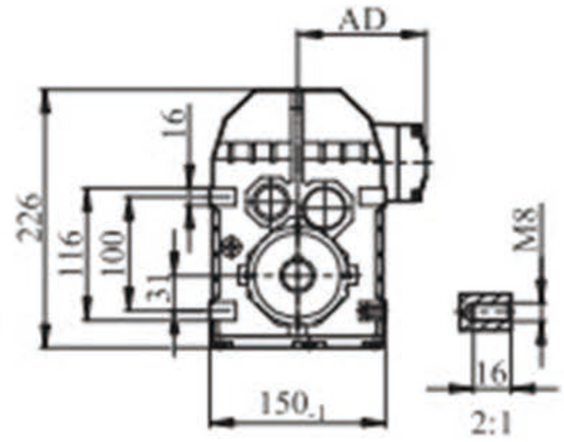

GFA/GFH/GFV27

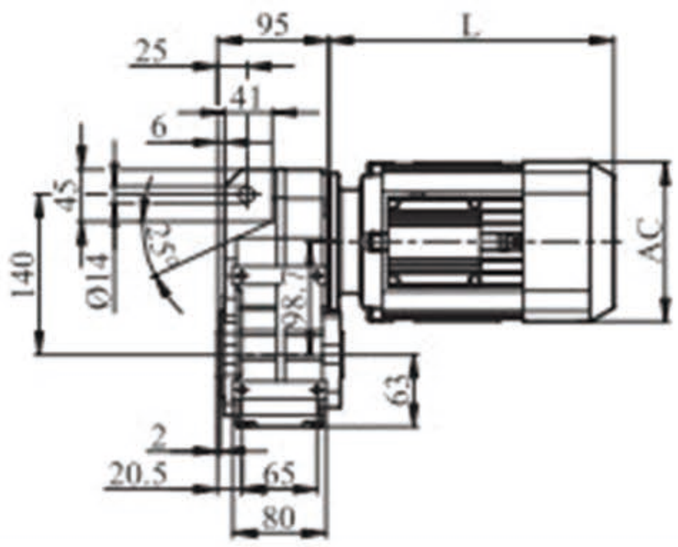

GFAZ/GFHZ/GFVZ27

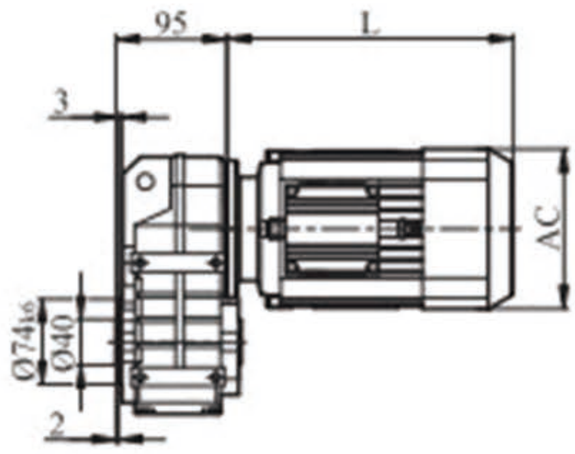

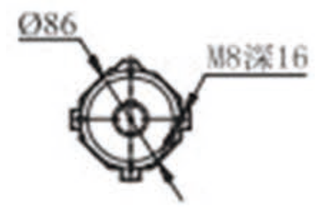

GFF27

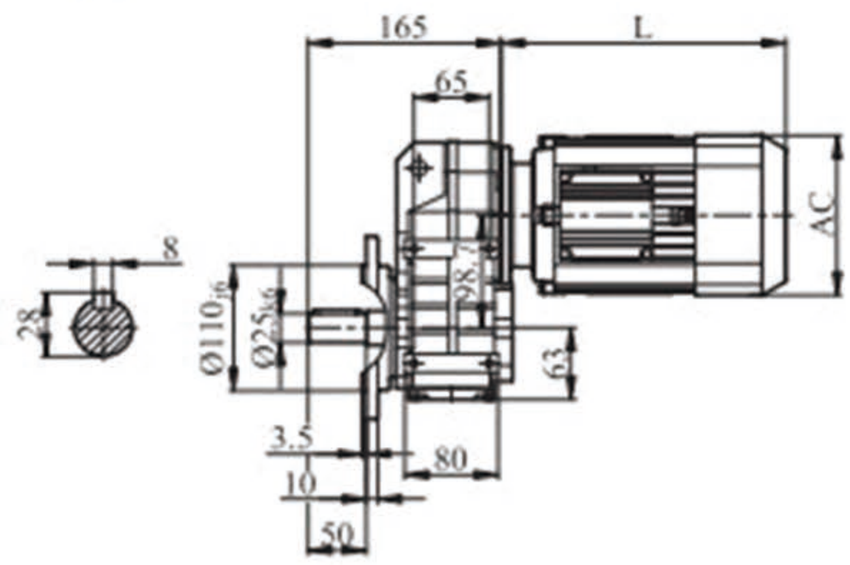

GFAF/GFHF/GFVF27

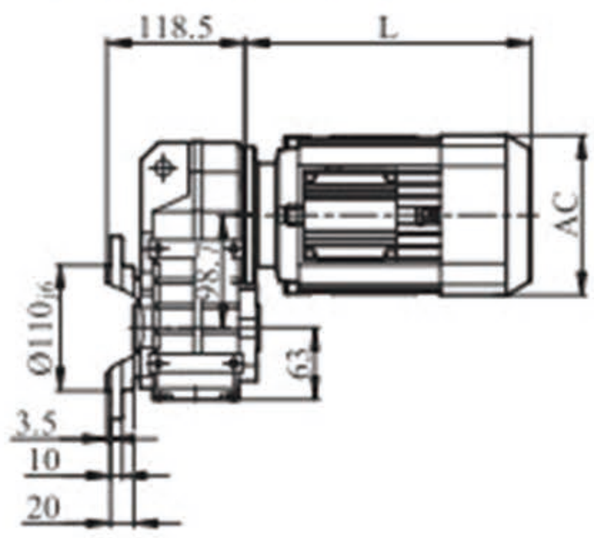

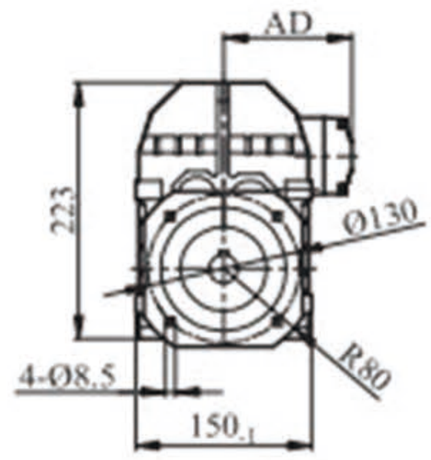

GFA/GFAZ/GFAF27 输出轴

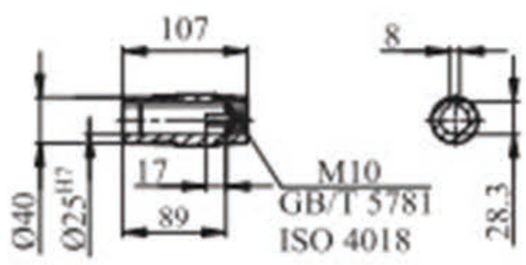

GFH/GFHZ/GFHF27输出轴

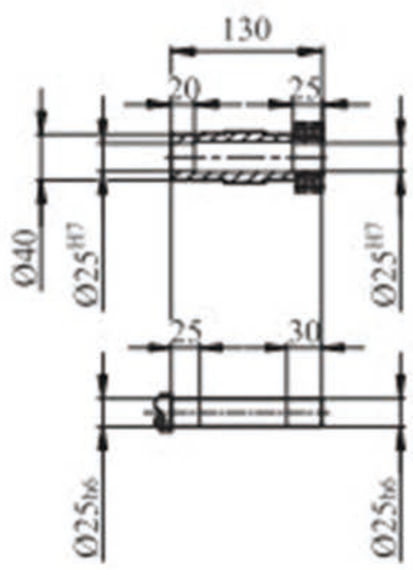

GFV/GFVZ/GFVF27输出轴

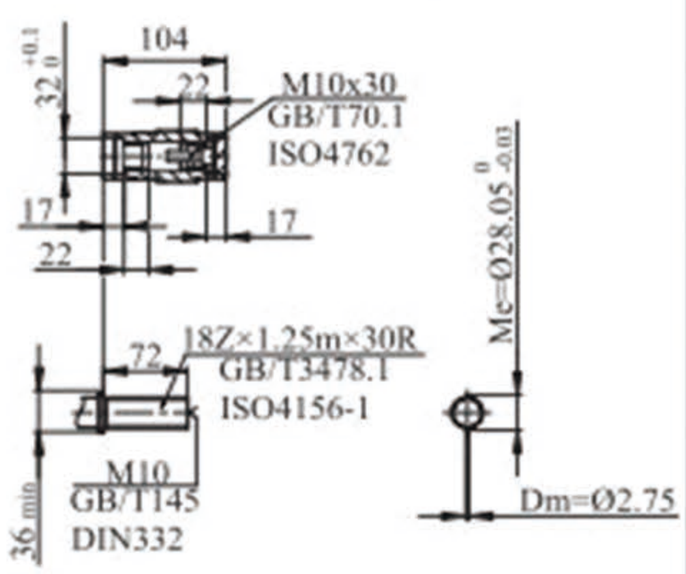

YE2电机机座号 Motor Size	63	71	80	90S	90L
L	225	260	290	300	330
AC	120	145	170	190	190
AD	110	130	135	145	145

GF37

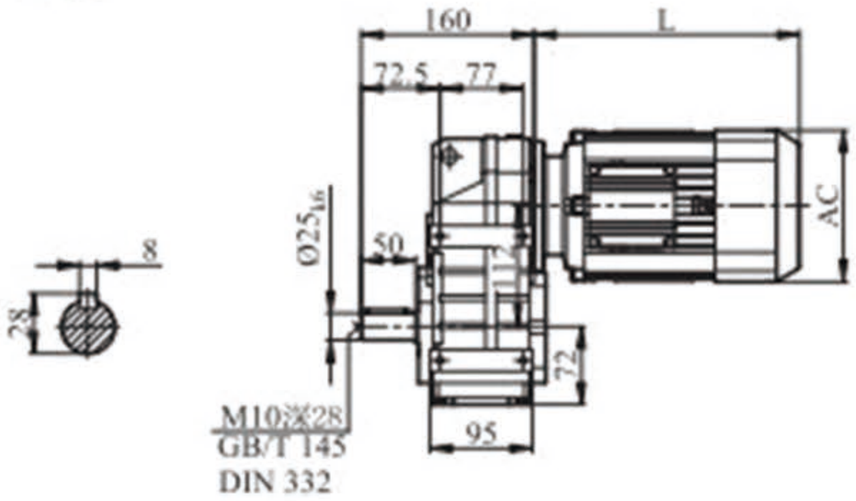

GFA37-T

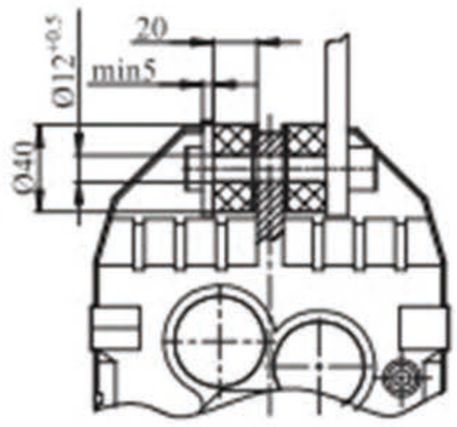

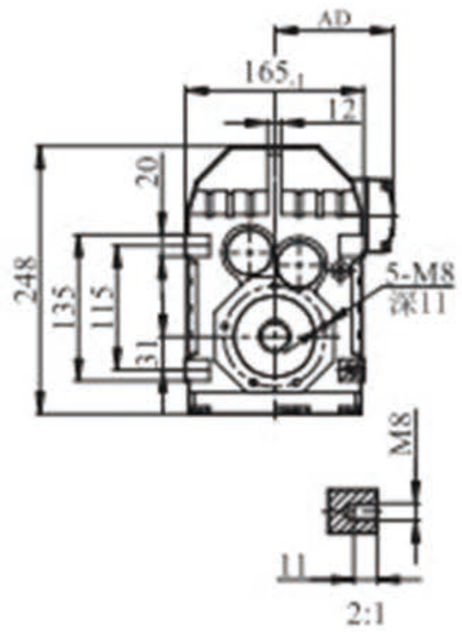

GFA/GFH/GFV37

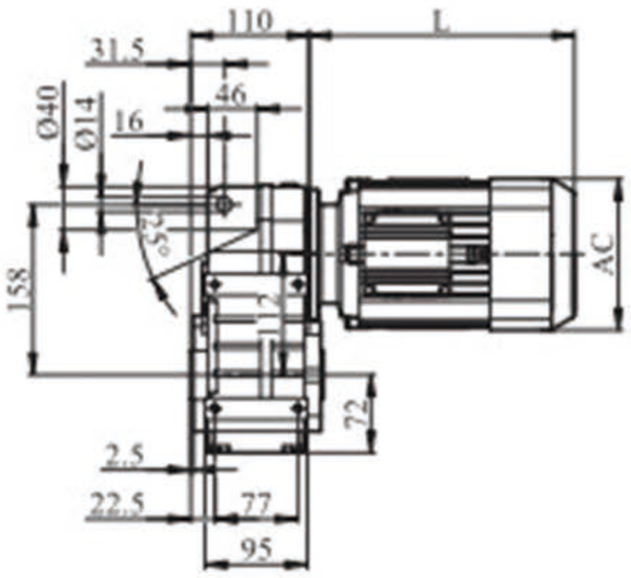

GFAZ/GFHZ/GFVZ37

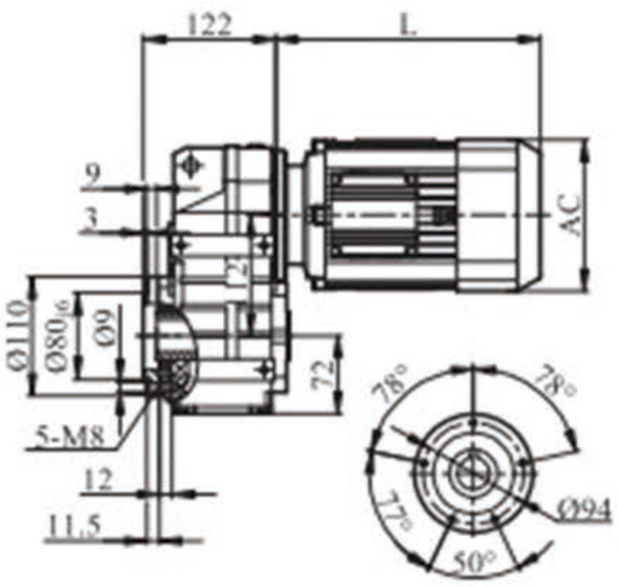

GFF37

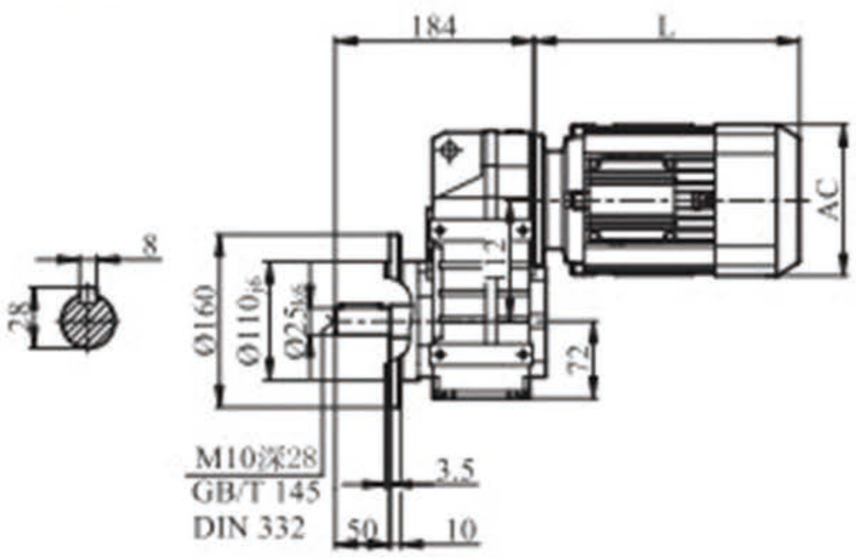

GFAF/GFHF/GFVF37

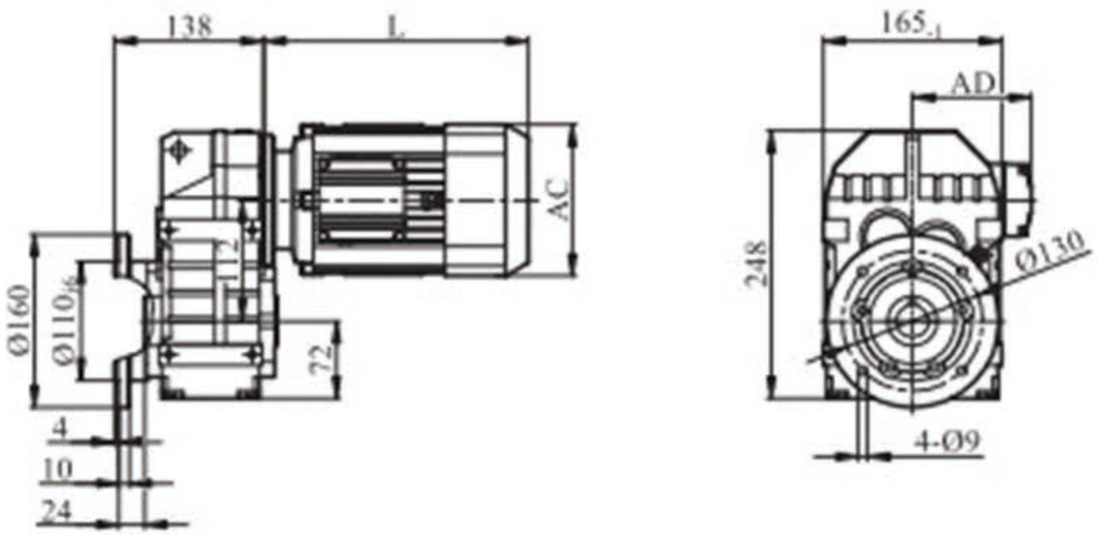

GFA/GFAZ/GFAF37输出轴

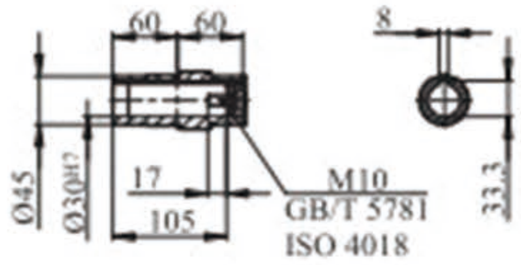

GFH/GFHZ/GFHF37输出轴

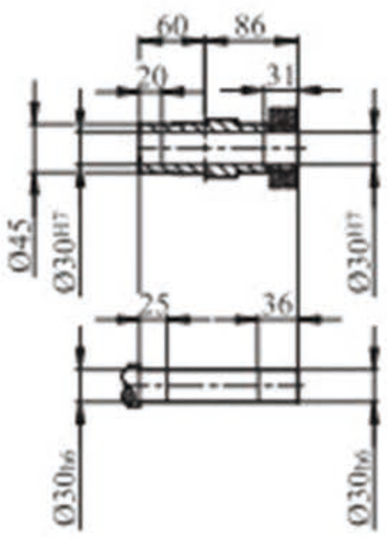

GFV/GFVZ/GFVF37输出轴

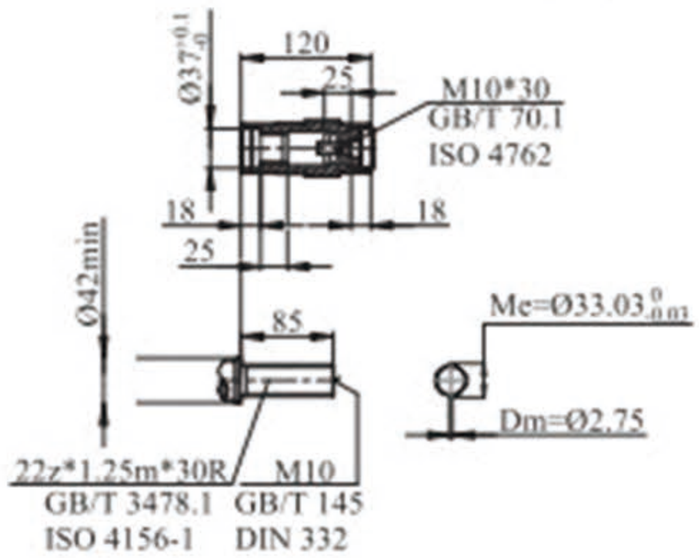

YE2电机机座号 Motor Size	63	71	80	90S	90L	100
L	225	260	290	300	330	340
AC	120	145	170	190	190	195
AD	110	130	135	145	145	180

GF47

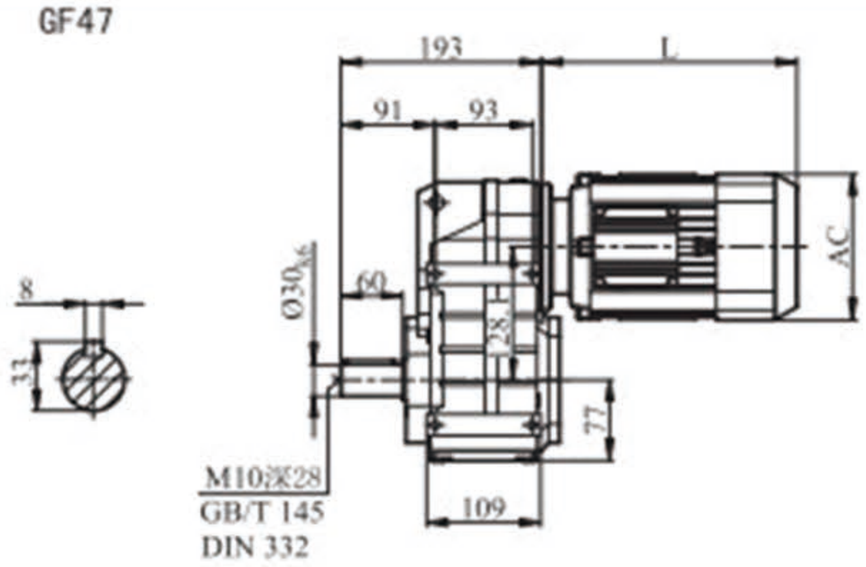

GFA47-T

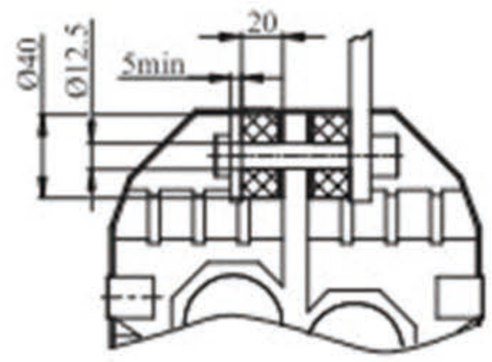

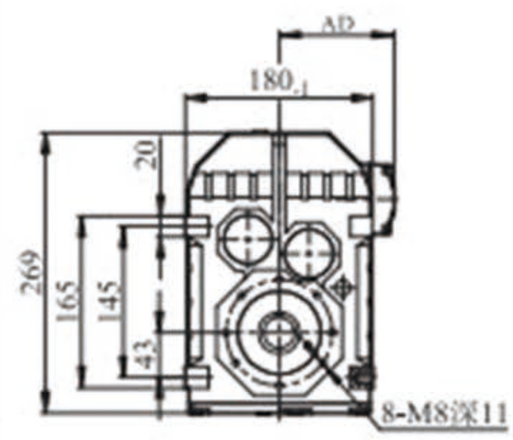

GFA/GFH/GFV47

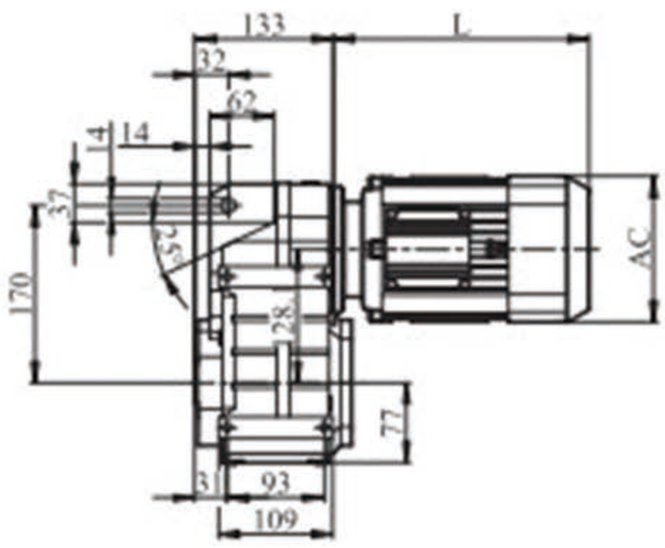

GFAZ/GFHZ/GFVZ47

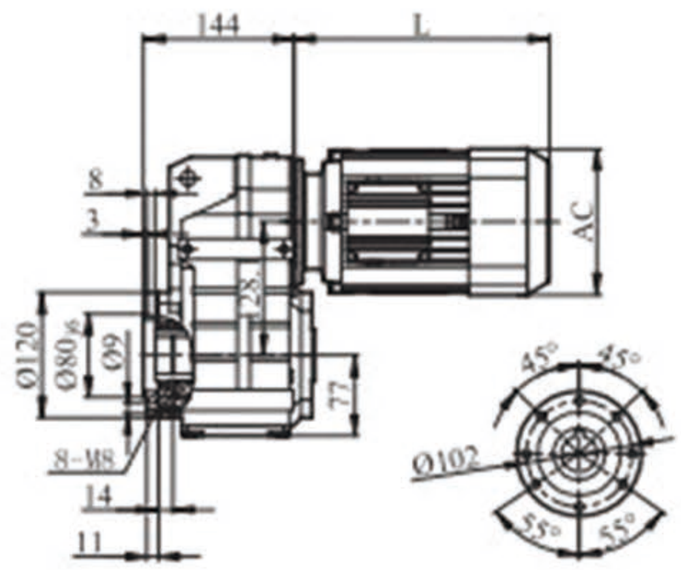

GFF47

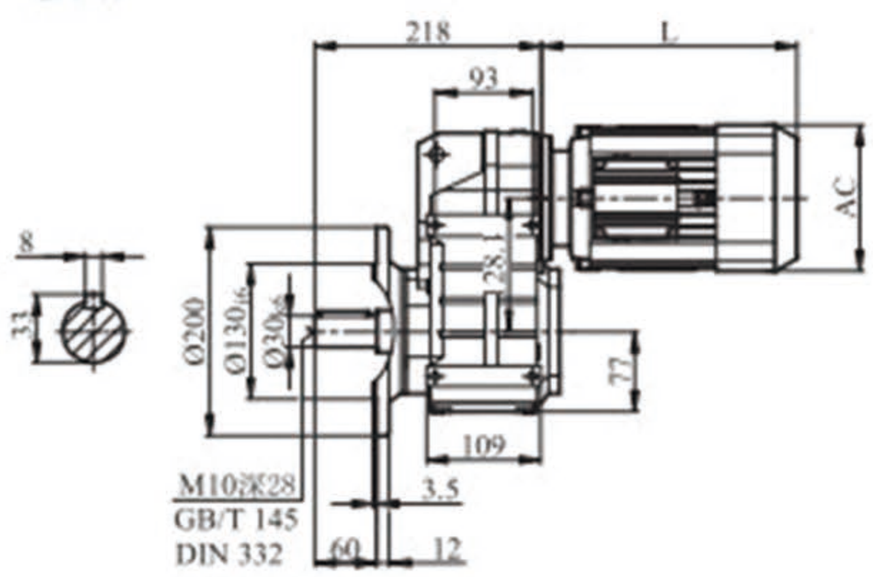

GFAF/GFHF/GFVF47

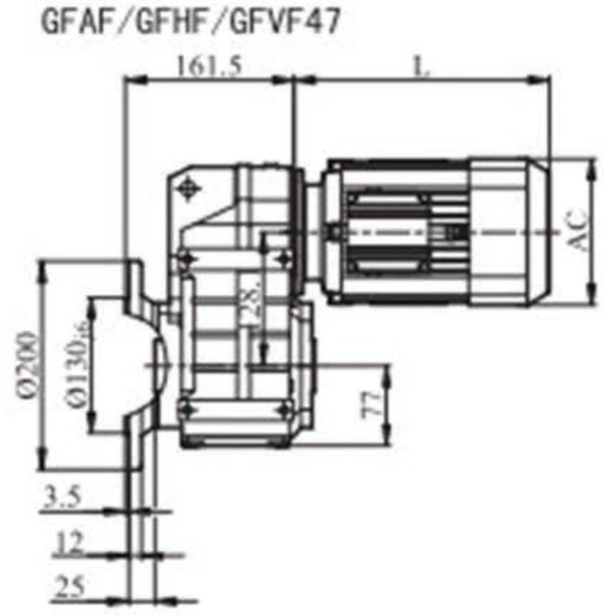

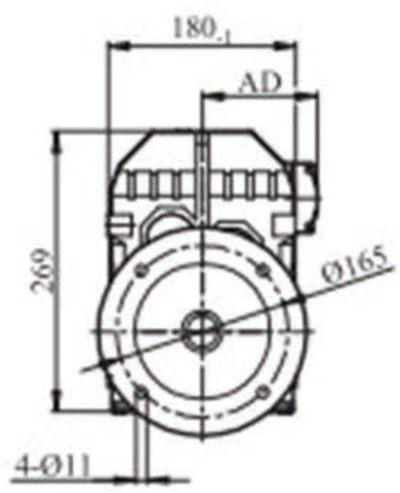

GFA/GFAZ/GFAF47输出轴

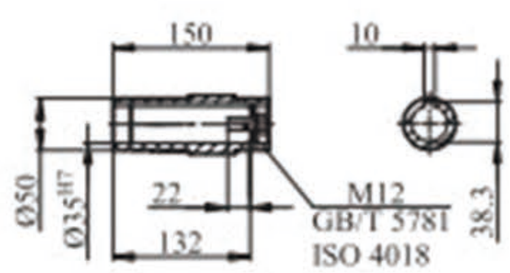

GFH/GFHZ/GFHF47输出轴

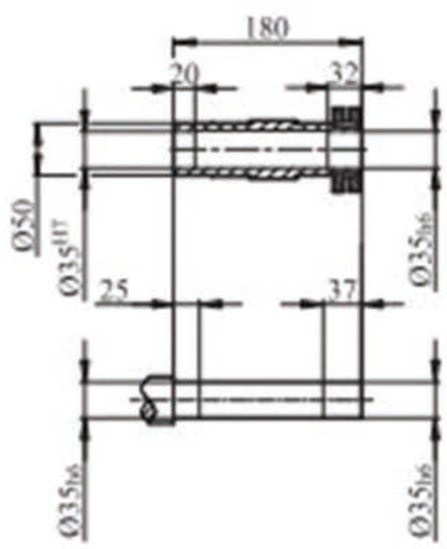

GFV/GFVZ/GFVF47输出轴

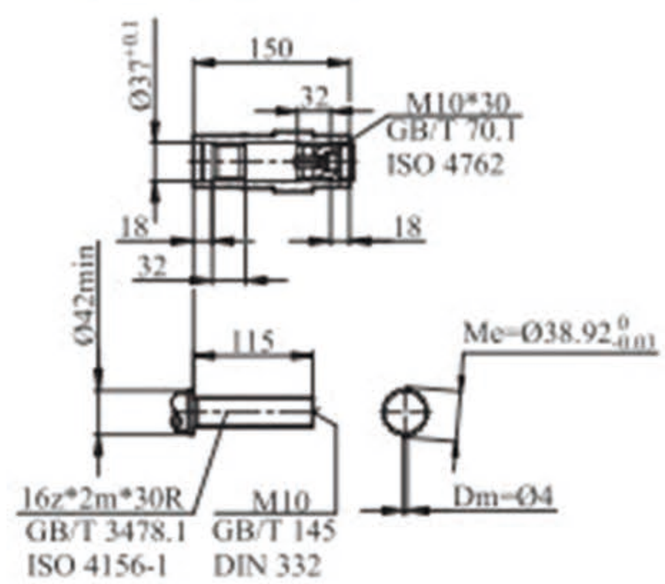

YE2电机机座号 Motor Size	63	71	80	90S	90L	100
L	225	260	290	300	330	340
AC	120	145	170	190	190	195
AD	110	130	135	145	145	180

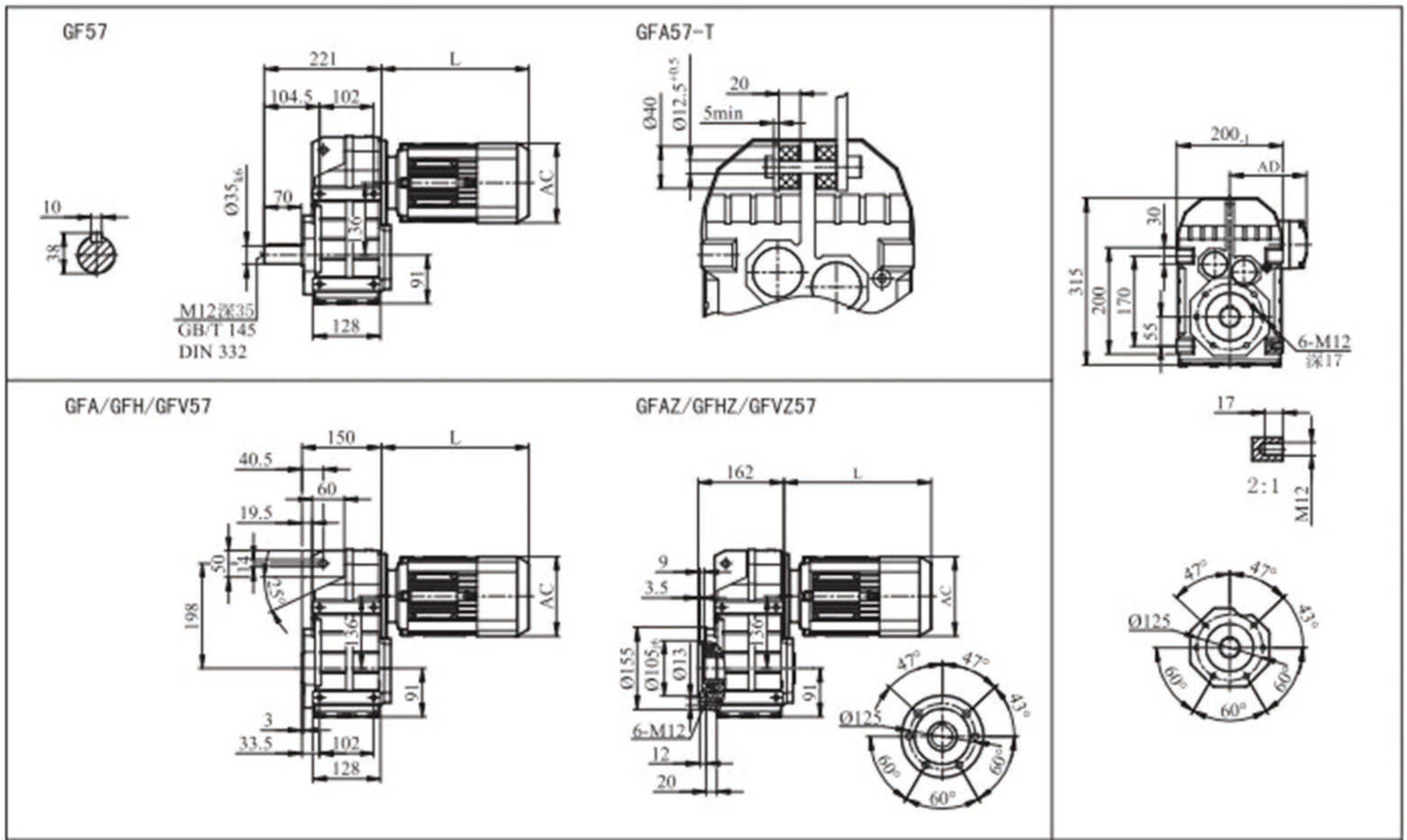

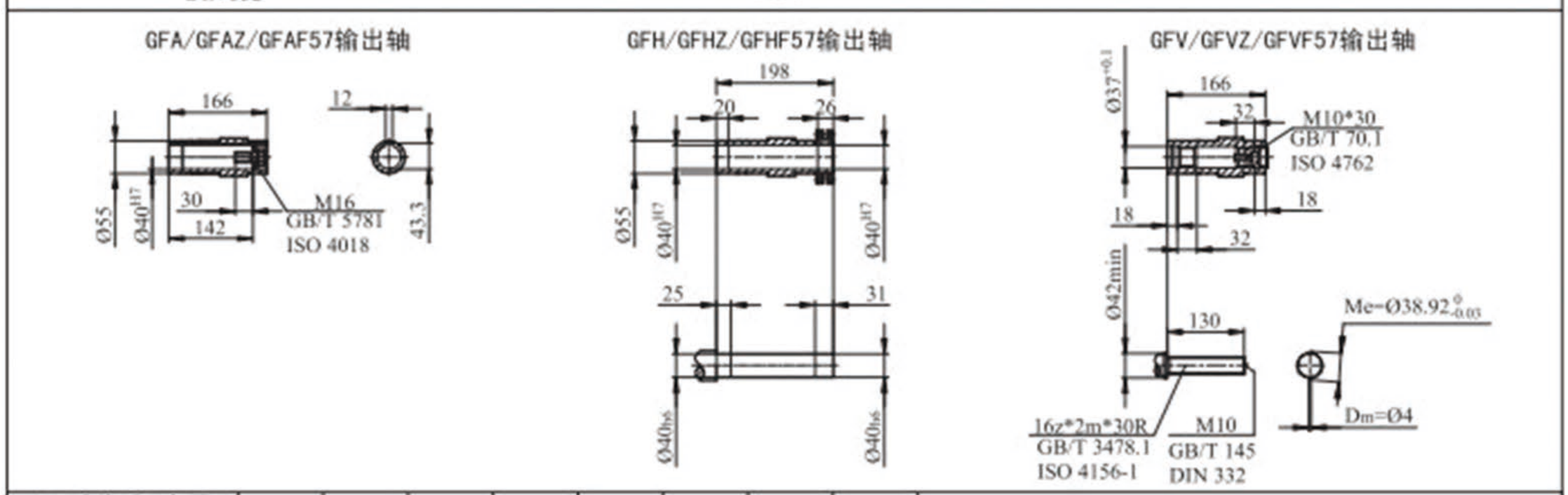

YE2电机机座号 Motor Size	63	71	80	90S	90L	100	112M	132S
L	205	260	290	300	330	340	380	430
AC	120	145	170	190	190	195	230	260
AD	110	130	135	145	145	180	215	210

GF

GF67

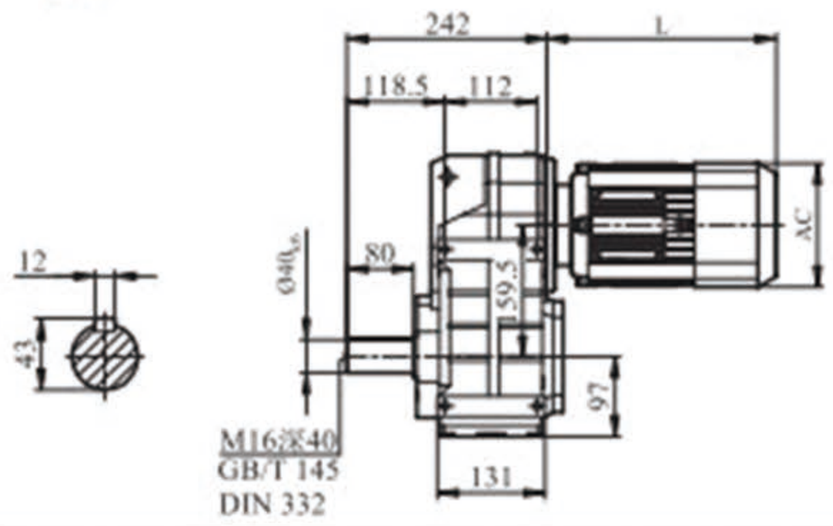

GFA67-T

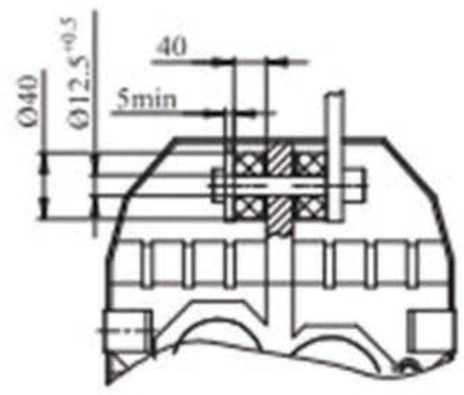

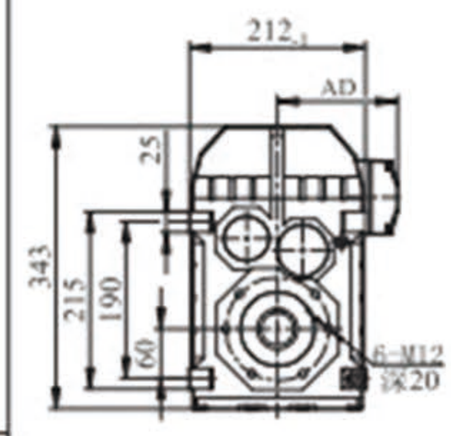

GFA/GFH/GFV67

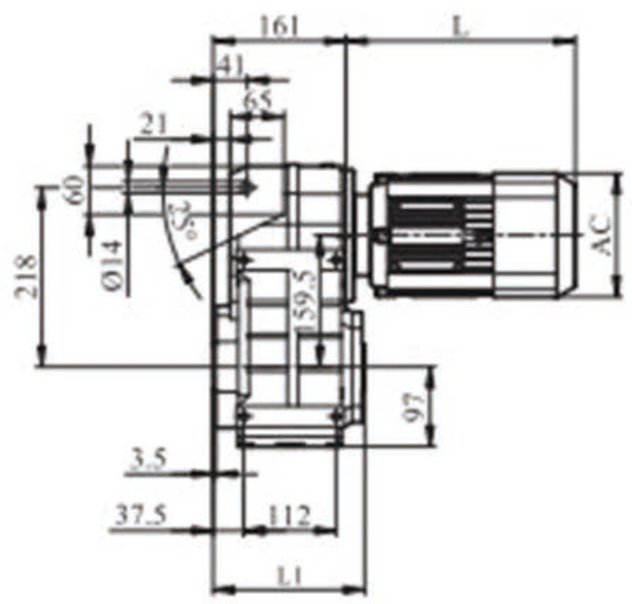

GFAZ/GFHZ/GFVZ67

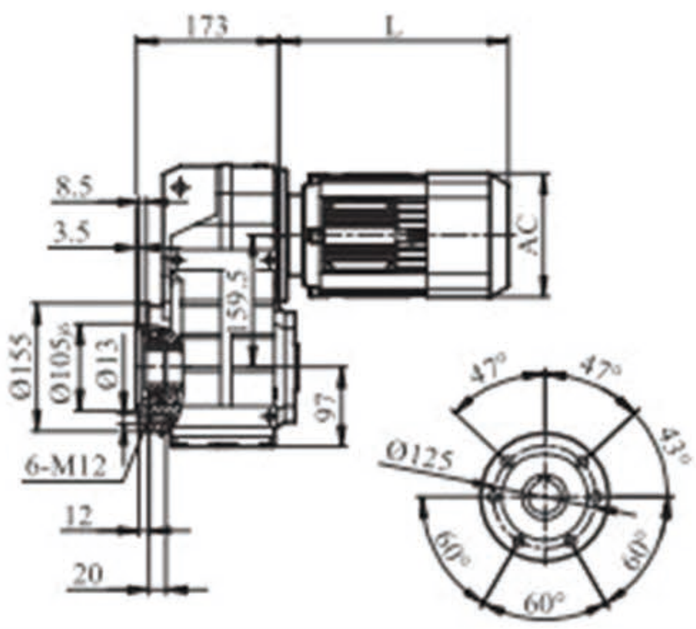

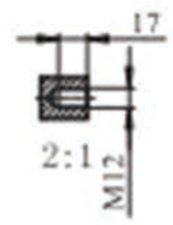

GFF67

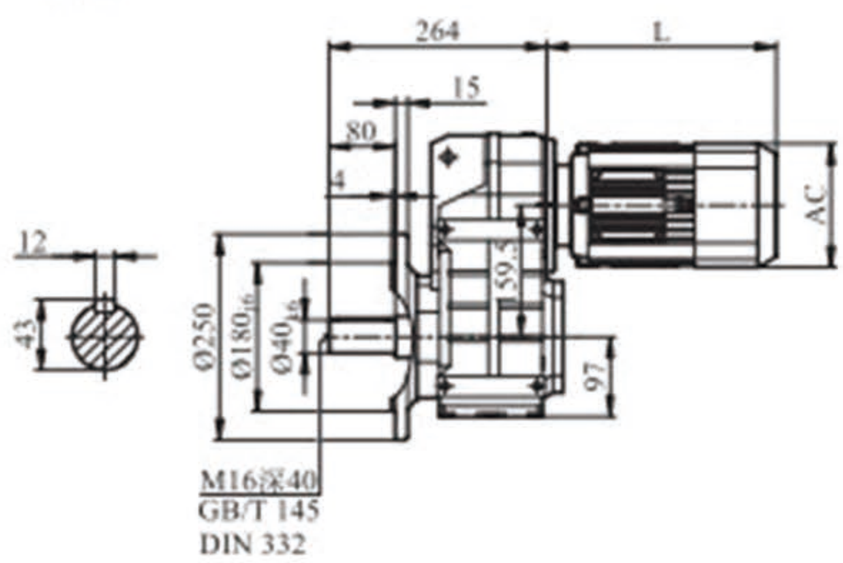

GFAF/GFHF/GFVF67

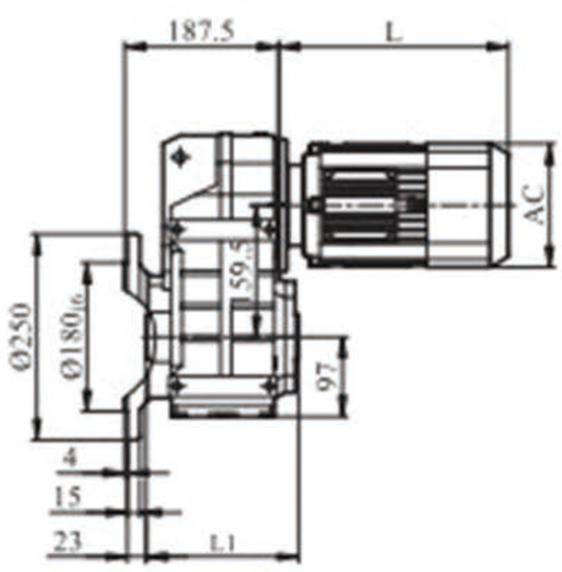

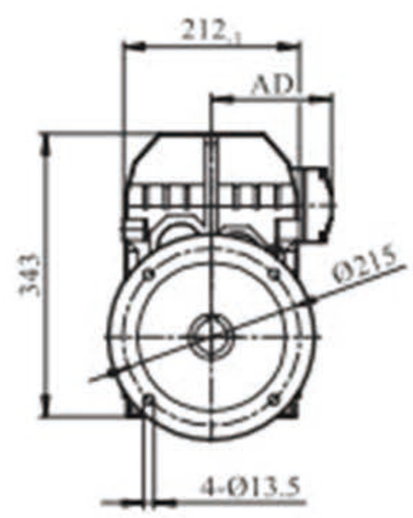

GFA/GFAZ/GFAF67输出轴

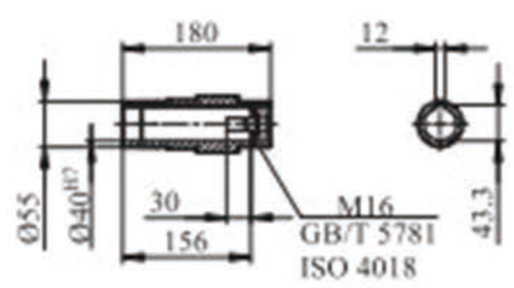

GFH/GFHZ/GFHF67输出轴

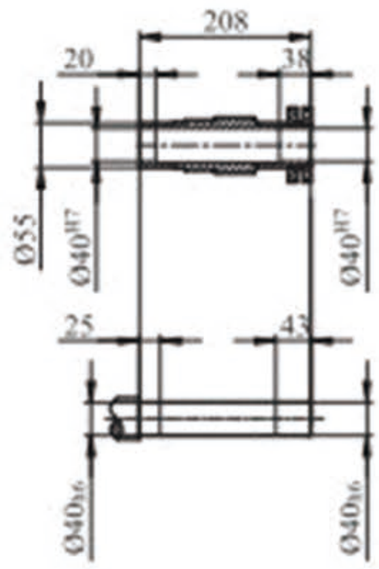

GFV/GFVZ/GFVF67输出轴

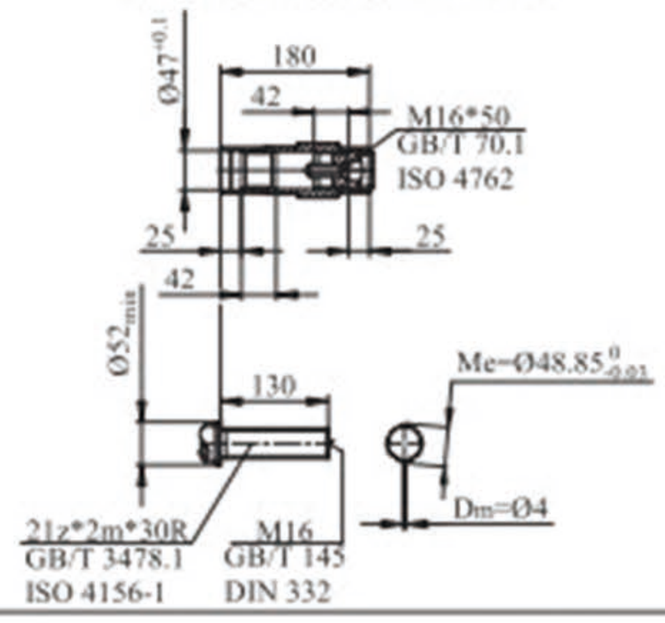

YE2电机机座号 Motor Size	63	71	80	90S	90L	100	112M	132S
L	205	260	290	300	330	330	380	430
AC	120	145	170	190	190	210	230	280
AD	110	130	135	145	145	160	215	215

GF77

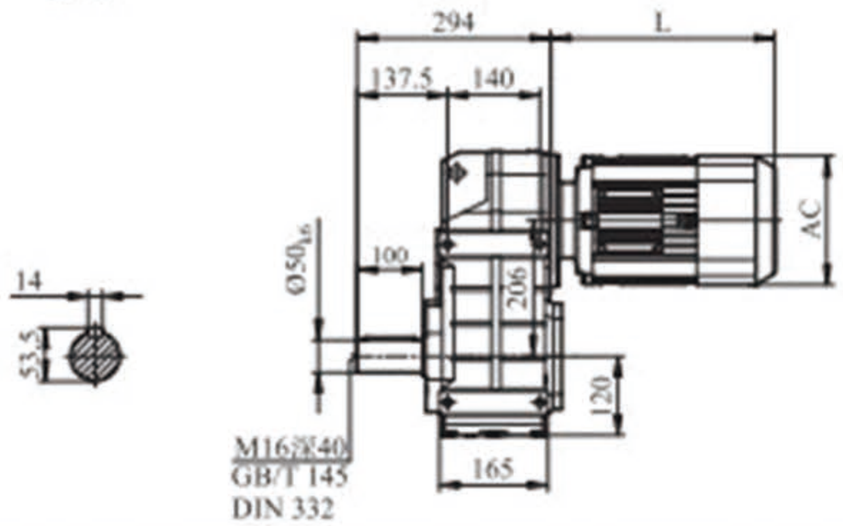

GFA77-T

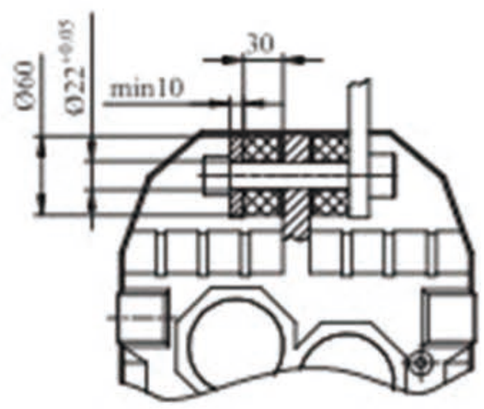

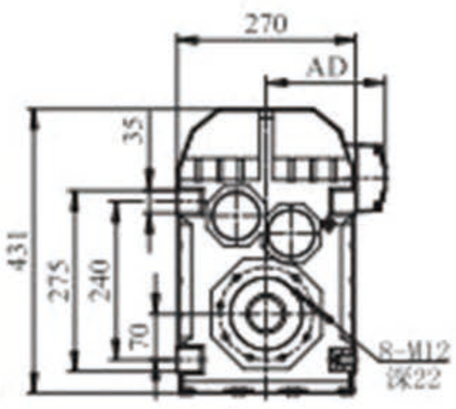

GFA/GFH/GFV77

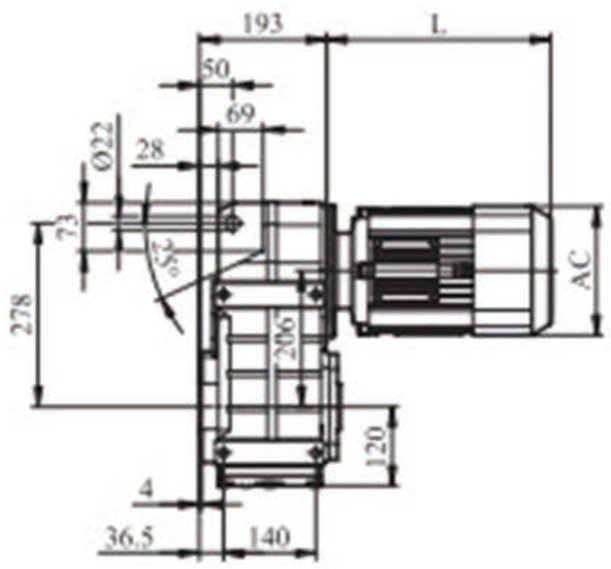

GFAZ/GFHZ/GFVZ77

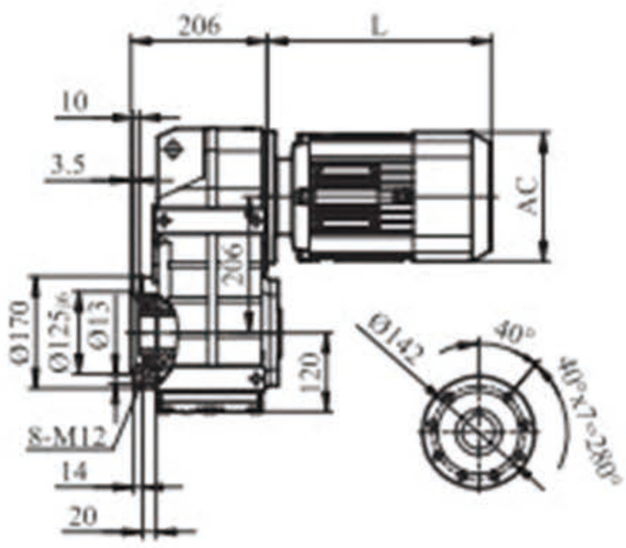

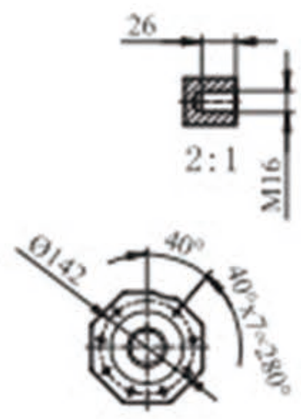

GFF77

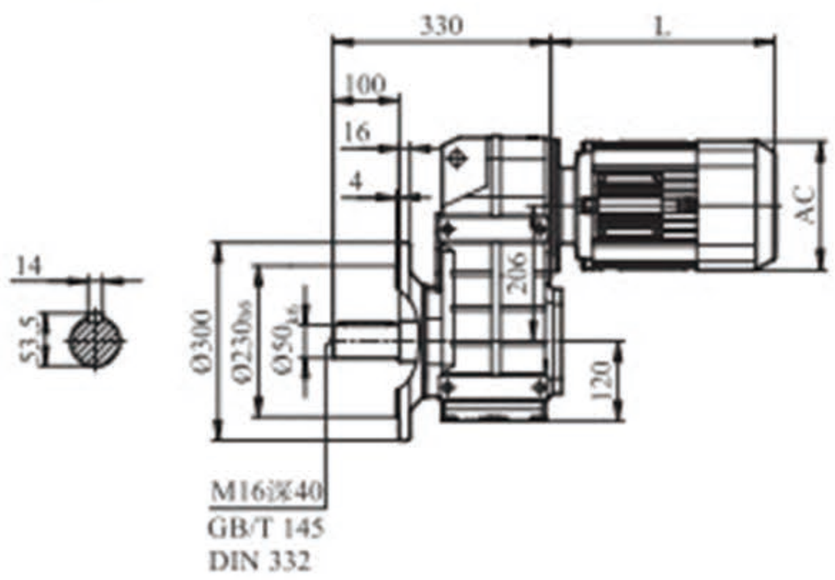

GFAF/GFHF/GFVF77

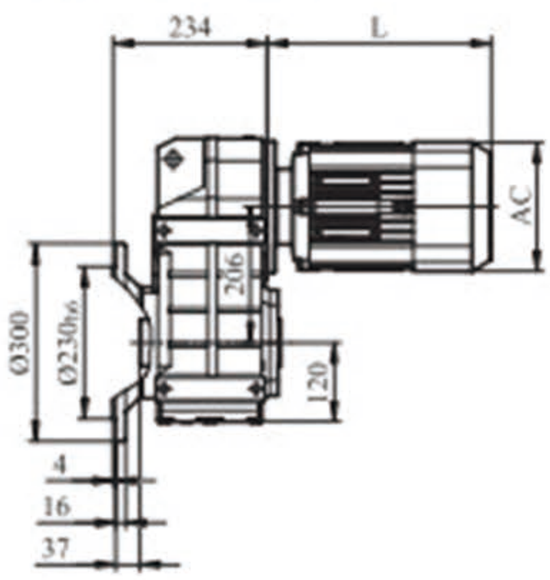

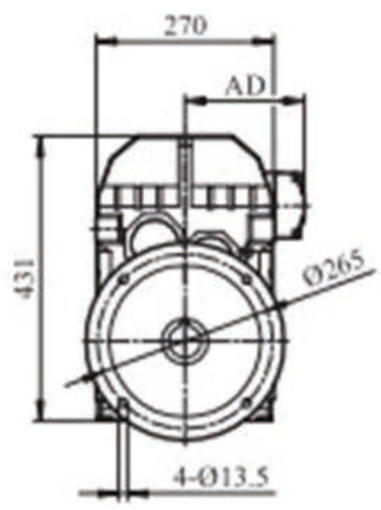

GFA/GFAZ/GFAF77输出轴

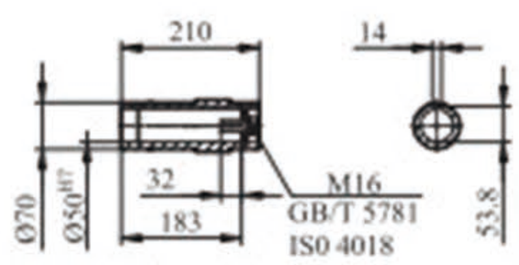

GFH/GFHZ/GFHF77输出轴

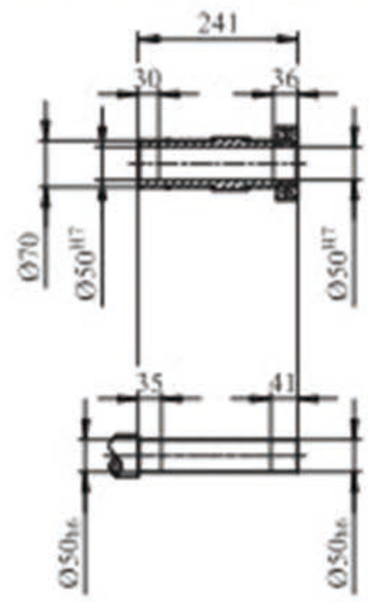

GFV/GFVZ/GFVF77输出轴

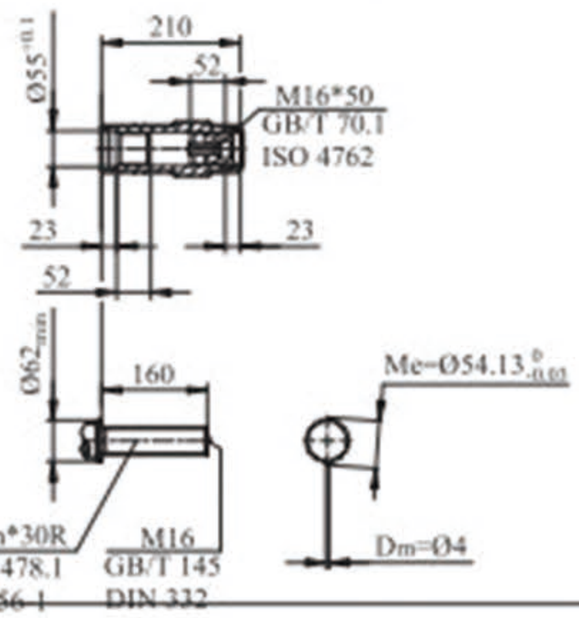

YE2电机机座号 Motor Size	71	80	90S	90L	100	112M	132S	132M	160M
L	254	284	292	322	322	370	418	457	524
AC	145	170	190	190	210	230	280	280	315
AD	130	135	145	145	160	215	215	215	255

GF87

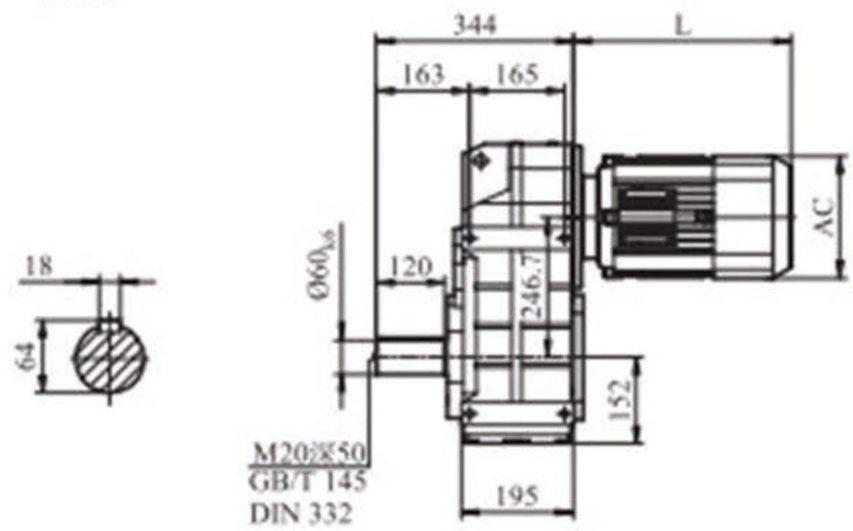

GFA87-T

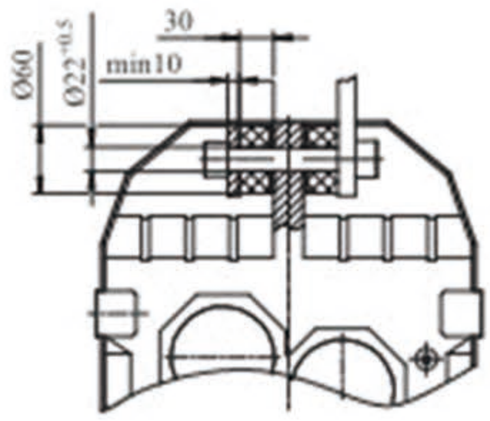

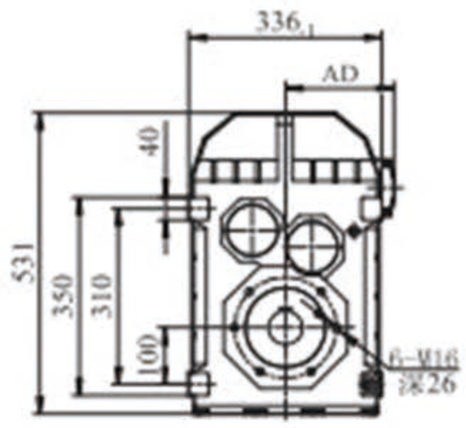

GFA/GFH/GFV87

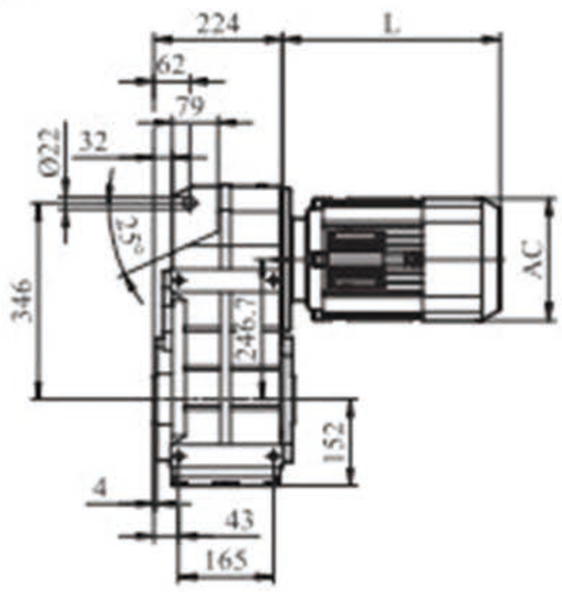

GFAZ/GFHZ/GFVZ87

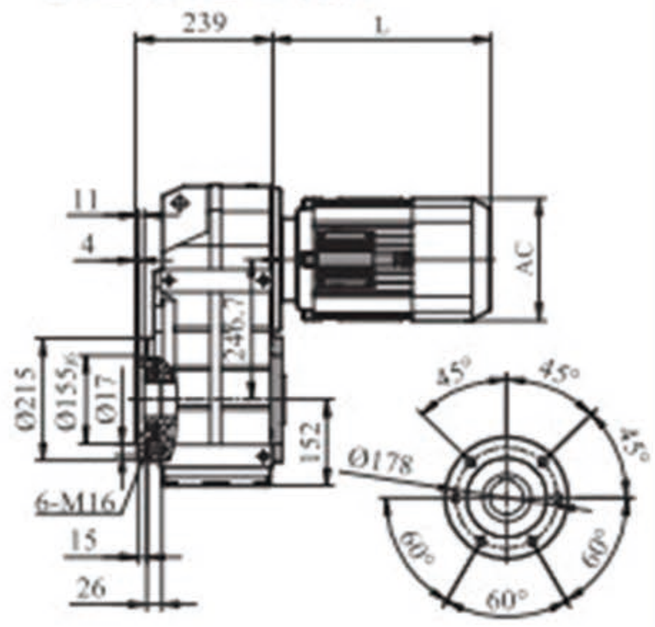

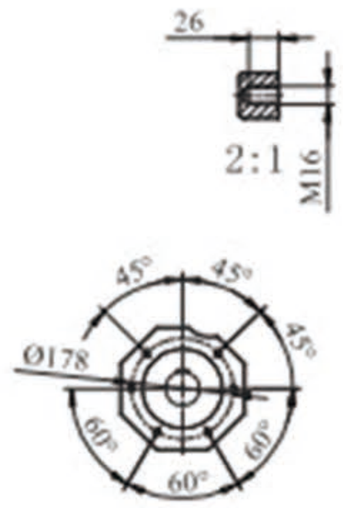

GFF87

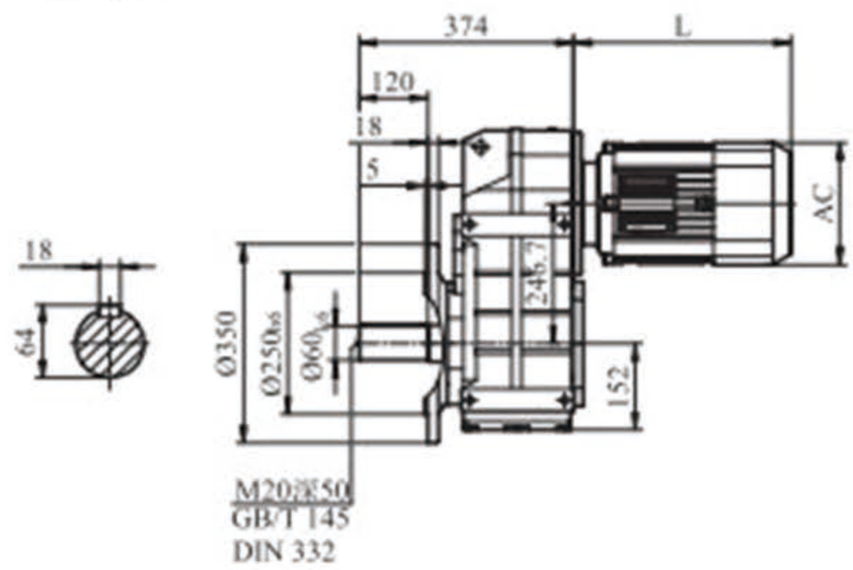

GFAF/GFHF/GFVF87

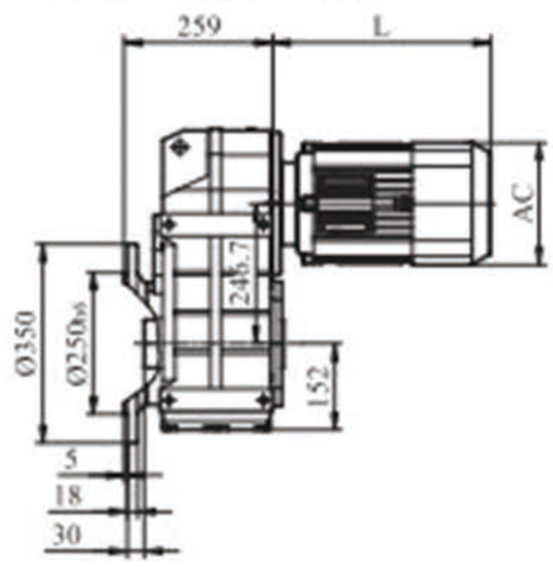

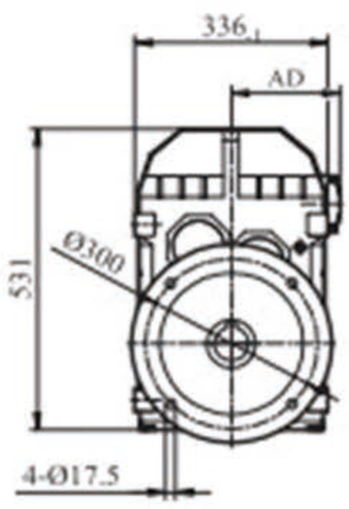

GFA/GFAZ/GFAF87输出轴

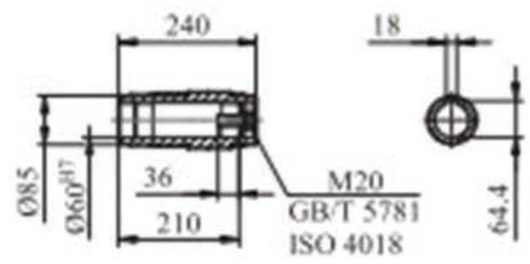

GFH/GFHZ/GFHF87输出轴

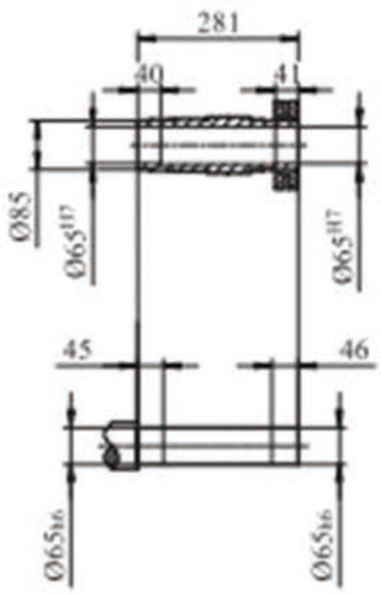

GFV/GFVZ/GFVF87输出轴

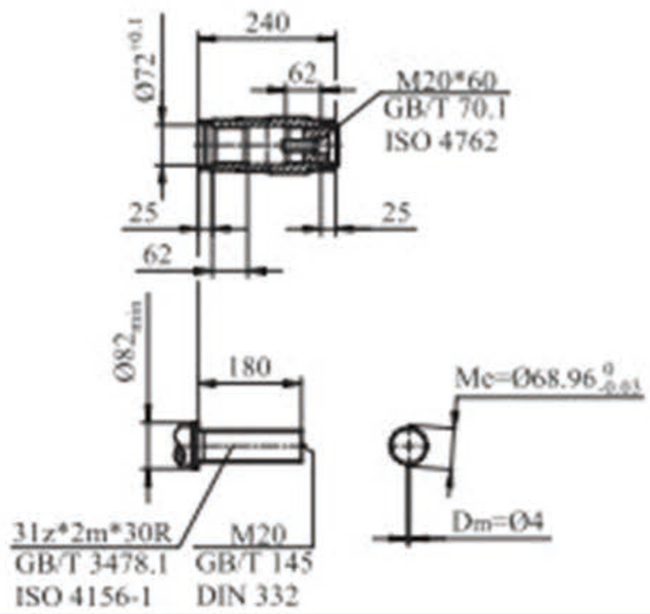

YE2电机机座号 Motor Size	80	90S	90L	100	112M	132S	132M	160M	160L	180M	180L
L	280	288	318	318	365	413	452	524	547	583	616
AC	170	190	190	210	230	280	280	315	315	350	350
AD	135	145	145	160	215	215	215	255	255	280	280

GF97

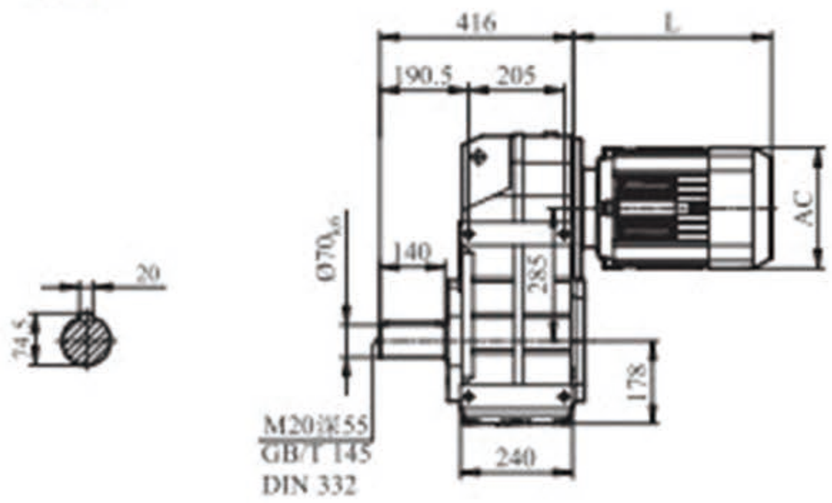

GFA97-T

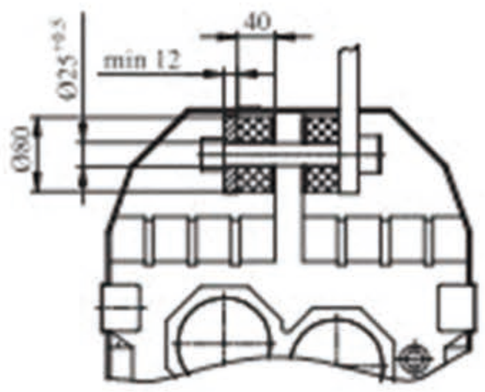

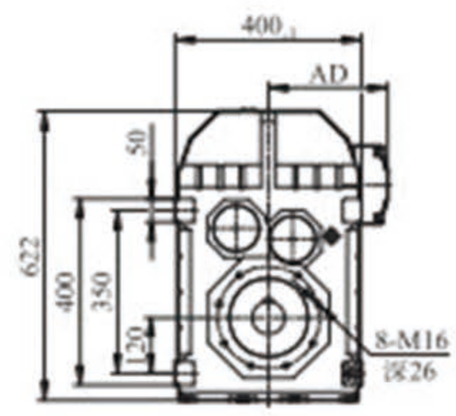

GFA/GFH/GFV97

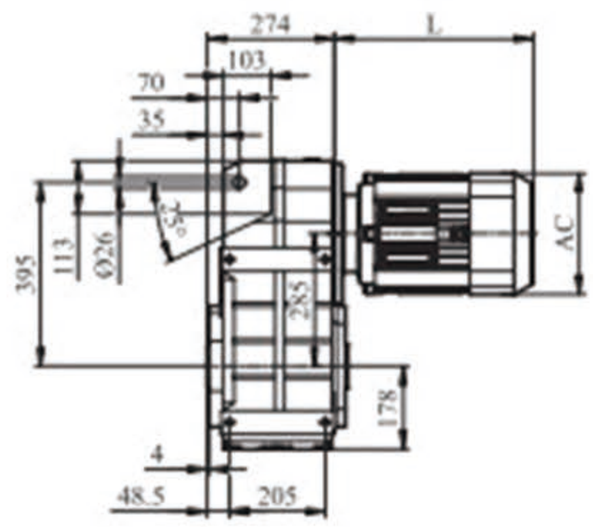

GFAZ/GFHZ/GFVZ97

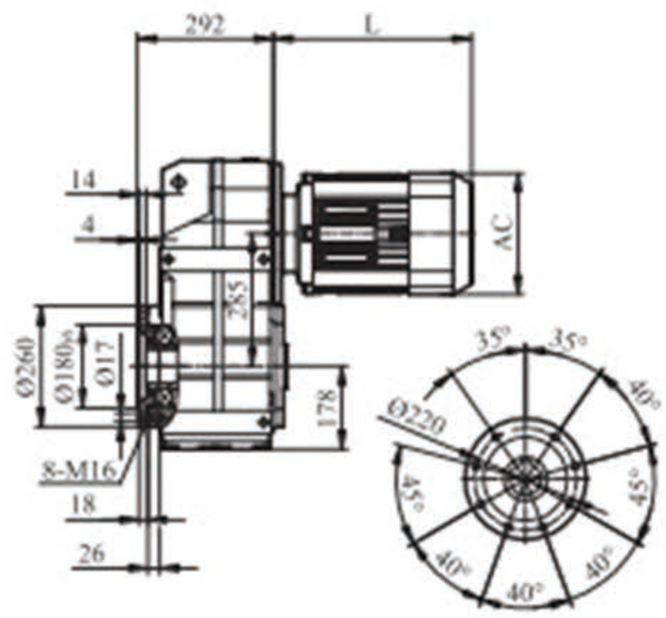

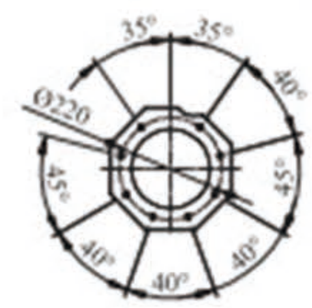

GFF97

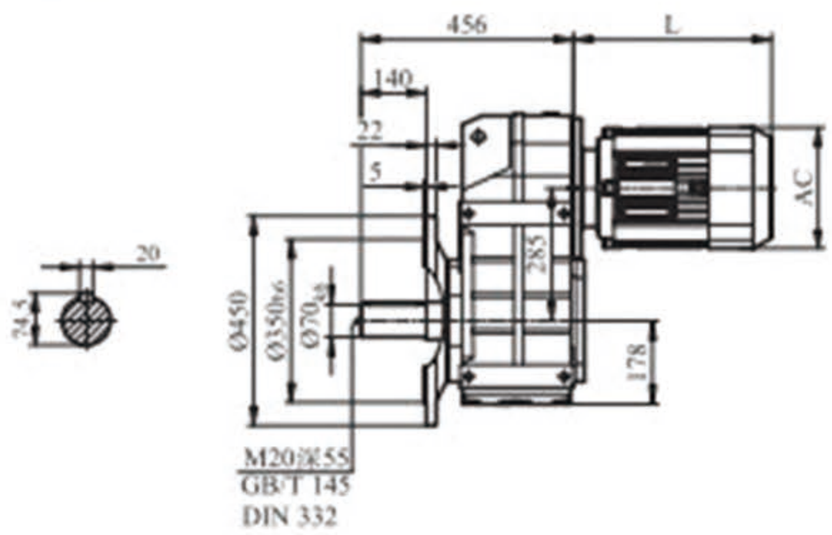

GFAF/GFHF/GFVF97

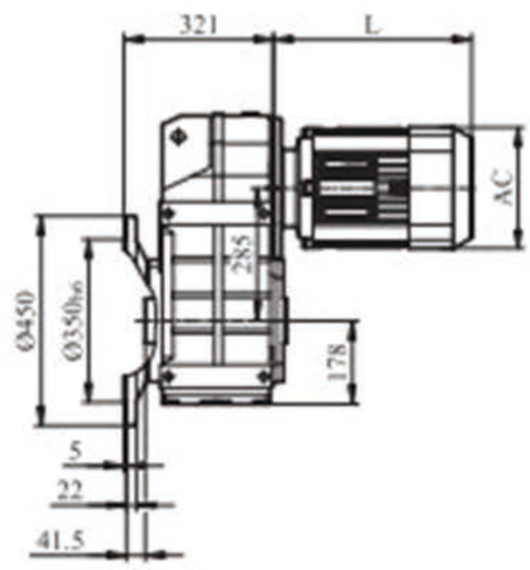

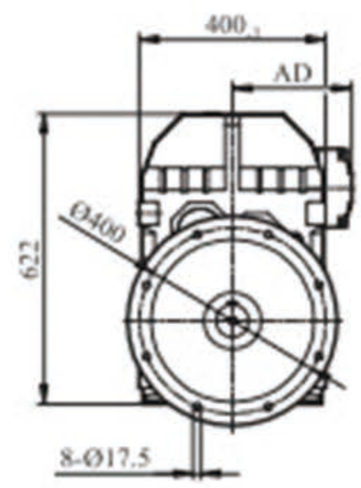

GFA/GFAZ/GFAF97输出轴

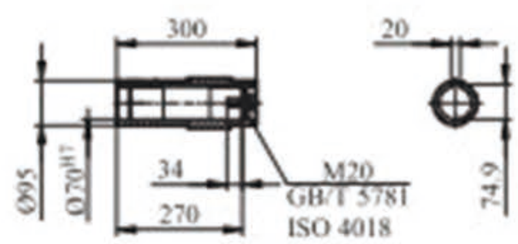

GFH/GFHZ/GFHF97输出轴

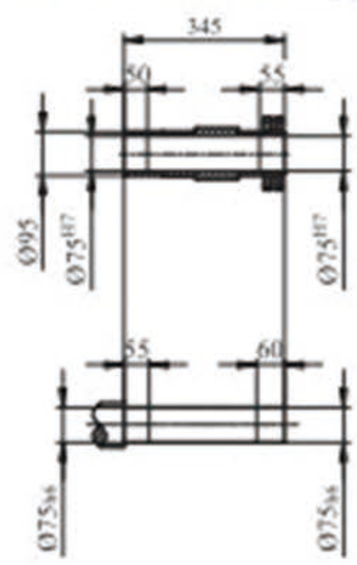

GFV/GFVZ/GFVF97输出轴

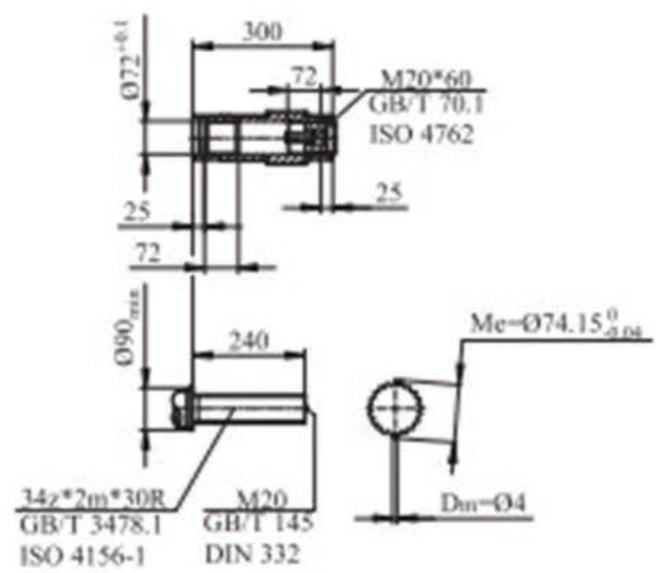

YE2电机机座号 Motor Size	90S	90L	100	112M	132S	132M	160M	160L	180M	180L	200L	
L	280	310	312	360	408	487	524	519	555	588	654	
AC	190	190	210	230	280	280	315	315	350	350	395	
AD	145	145	160	215	215	215	255	255	280	280	305	

GF107

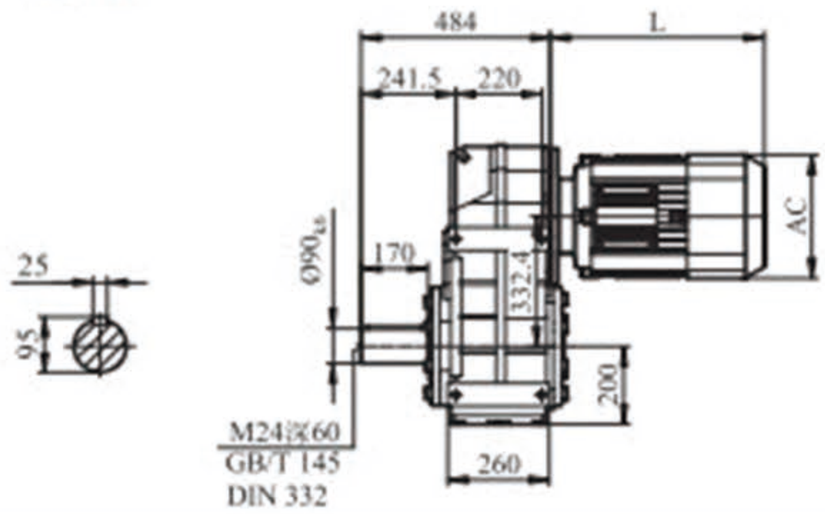

GFA107-T

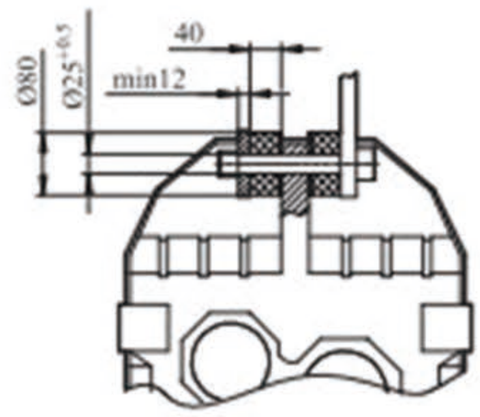

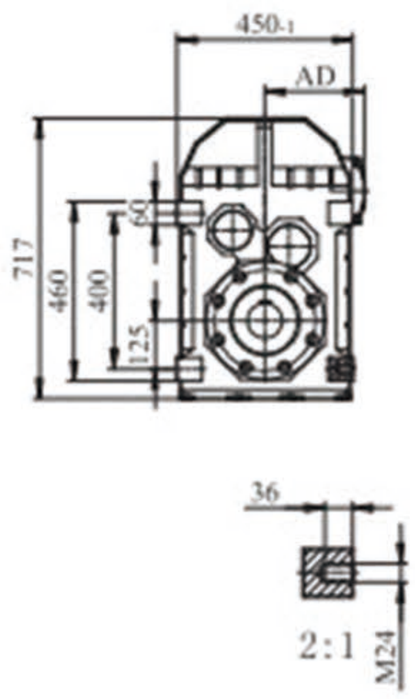

GFA/GFH/GFV107

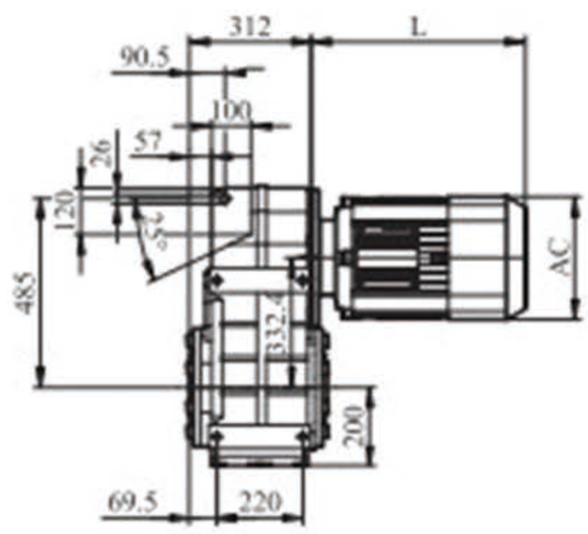

GFAZ/GFHZ/GFVZ107

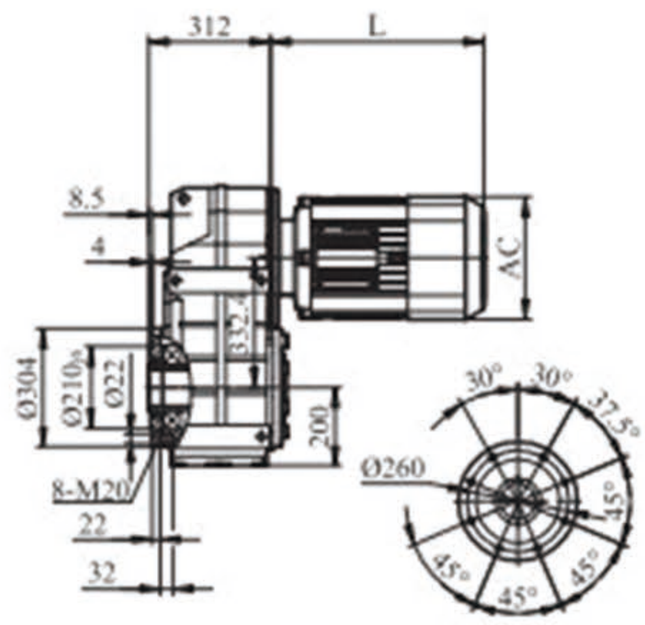

GFF107

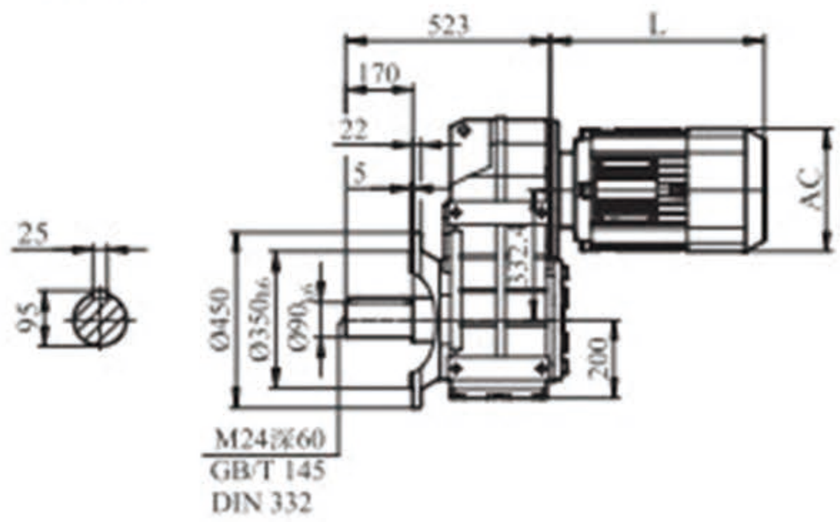

GFAF/GFHF/GFVF107

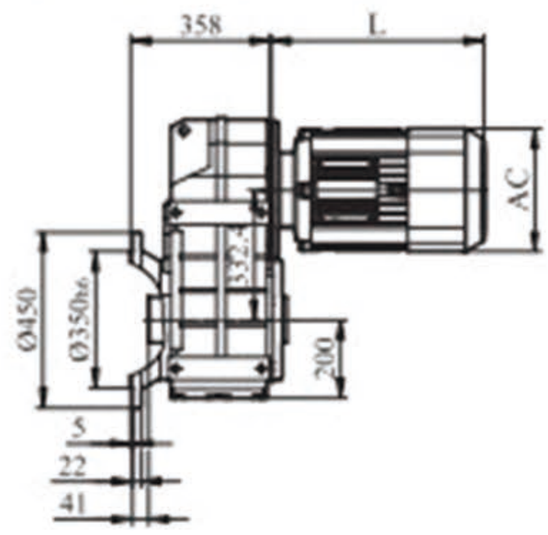

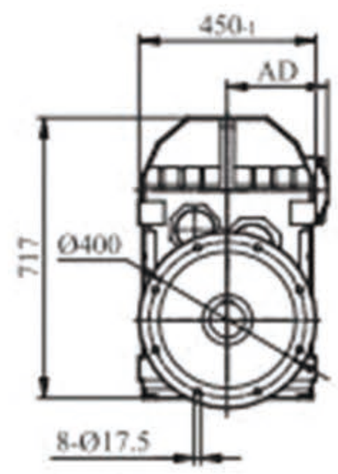

GFA/GFAZ/GFAF107输出轴

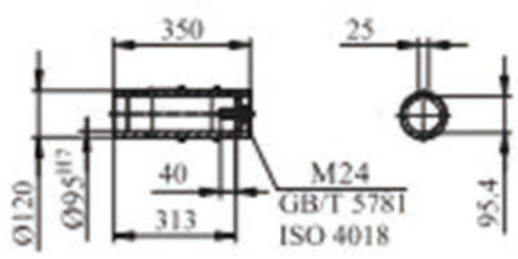

GFH/GFHZ/GFHF107输出轴

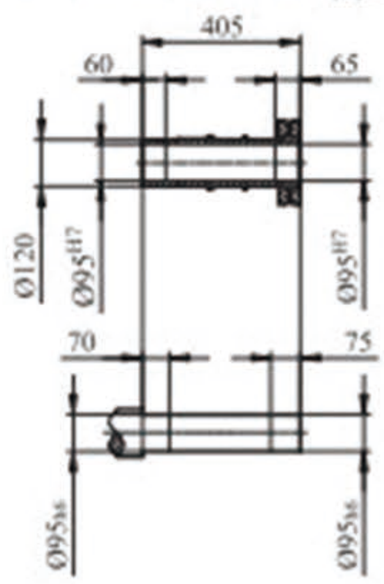

GFV/GFVZ/GFVF107输出轴

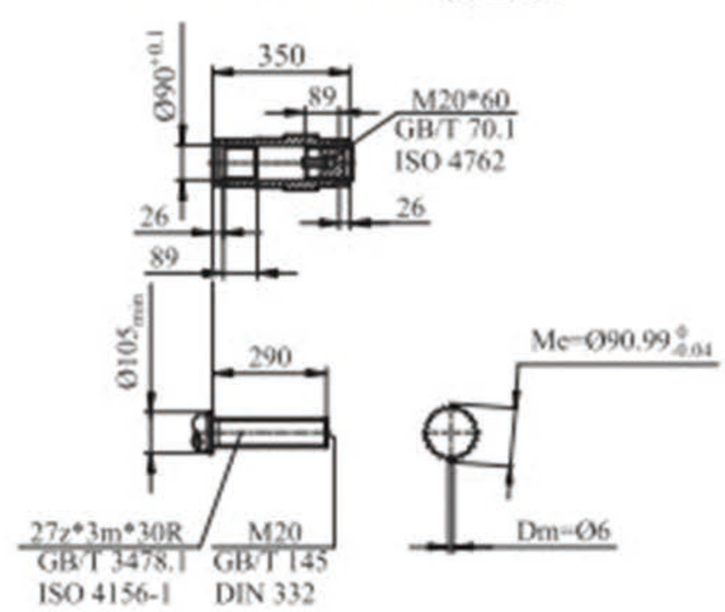

YE2电机机座号 Motor Size	100	112M	132S	132M	160M	160L	180M	180L	200L	225S	225M	
L	308	354	403	482	524	519	555	588	654	680	702	
AC	210	230	280	280	315	315	350	350	395	450	450	
AD	160	215	215	215	255	255	280	280	305	335	335	

GF127

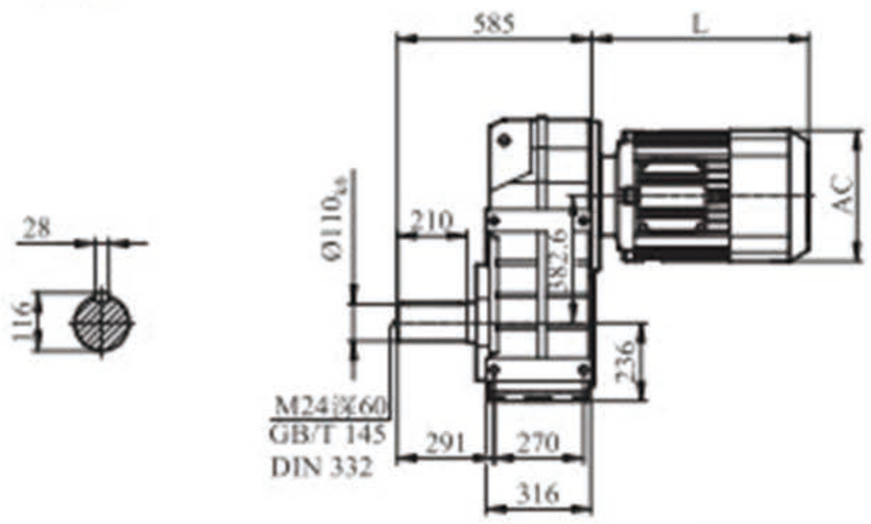

GFA127-T

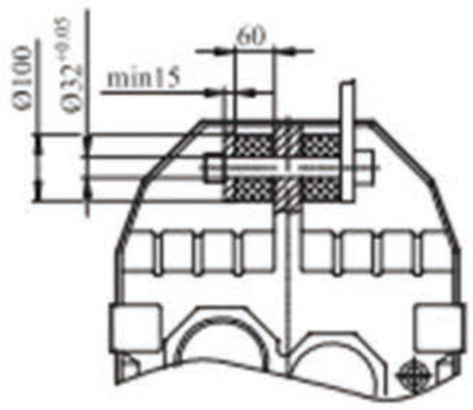

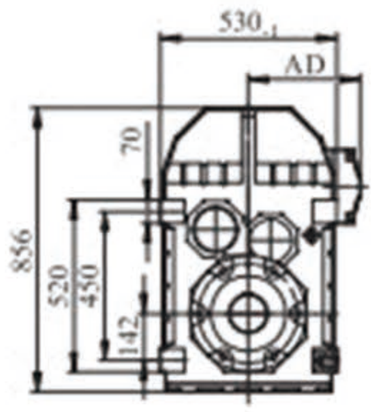

GFA/GFH127

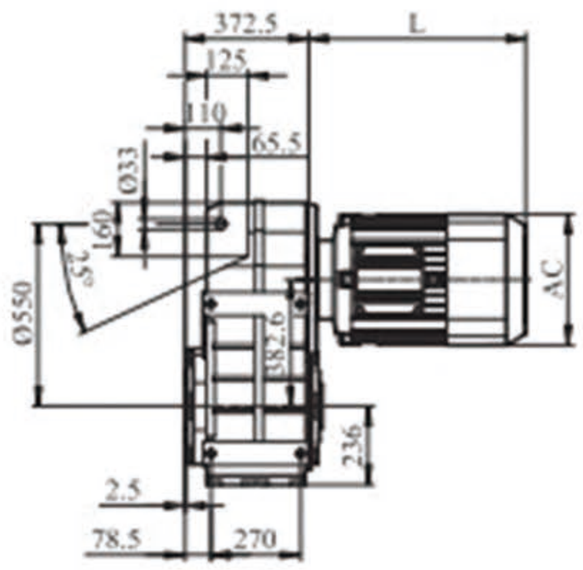

GFAZ/GFHZ127

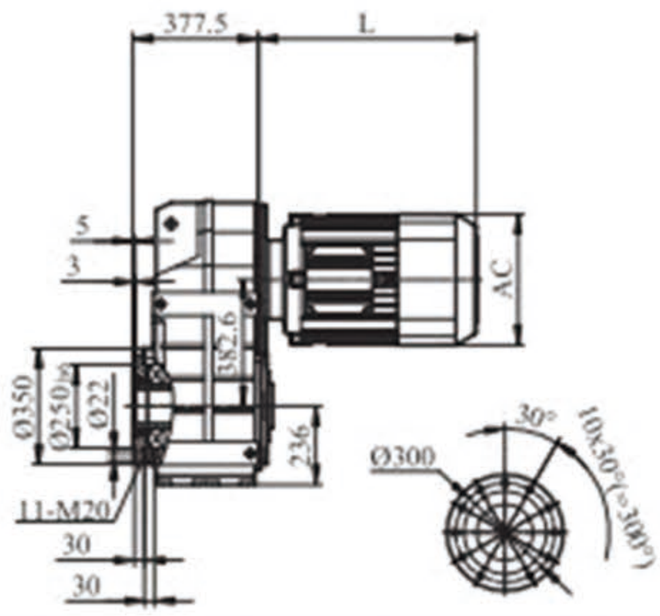

GFF127

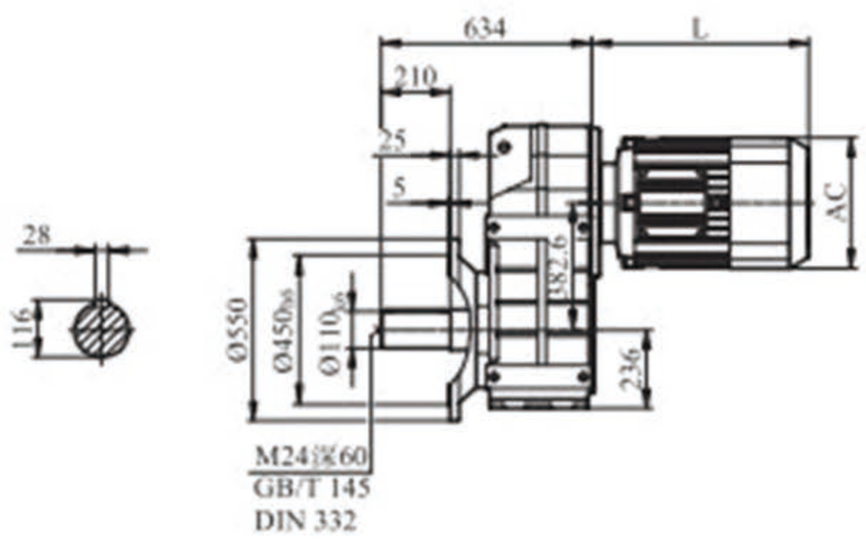

GFAF/GFHF127

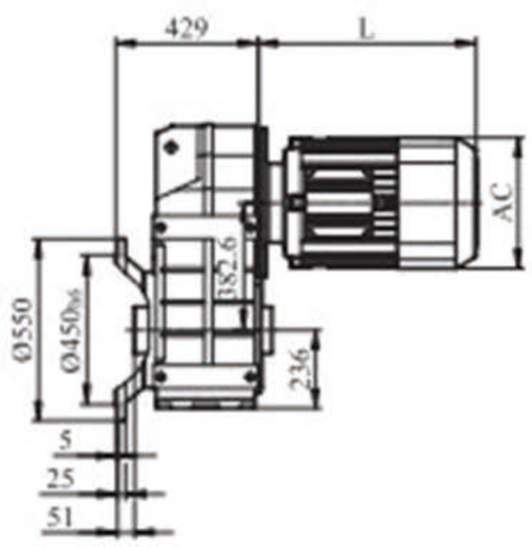

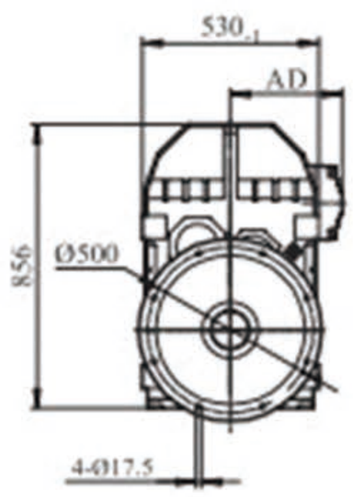

GFA/GFAZ/GFAF127输出轴

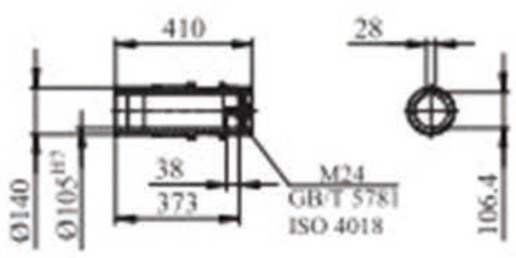

GFH/GFHZ/GFAF127输出轴

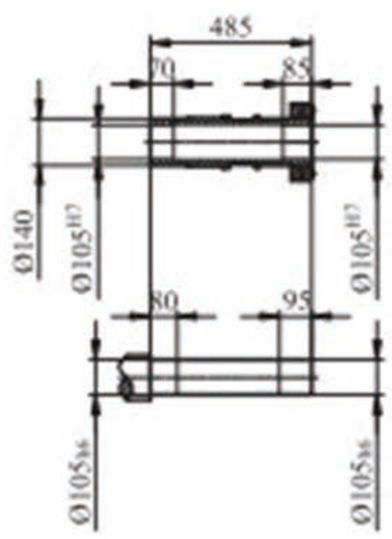

YE2电机机座号 Motor Size	132M	160M	160L	180M	180L	200L	225S	225M	250M	280S	280M
L	520	567	602	635	666	642	669	691	770	828	879
AC	260	315	315	350	350	395	450	450	480	530	530
AD	210	255	255	280	280	305	335	335	370	410	410

GF157

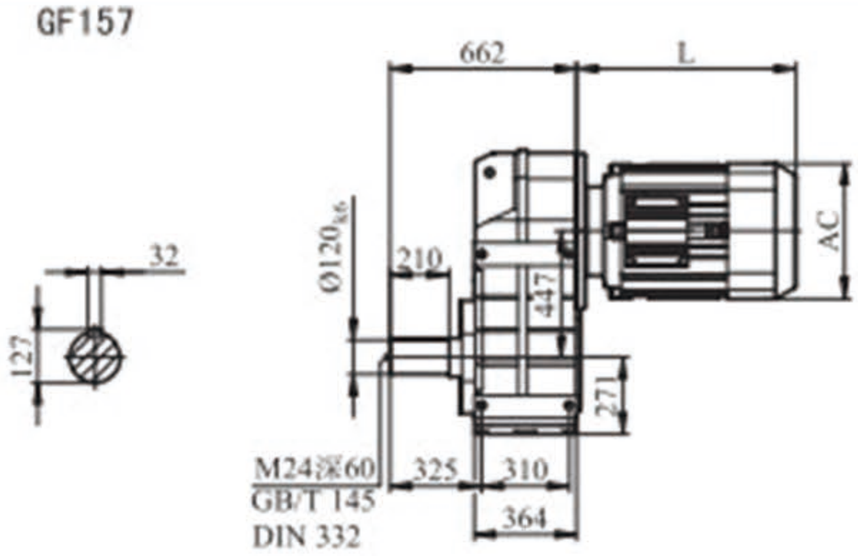

GFA157-T

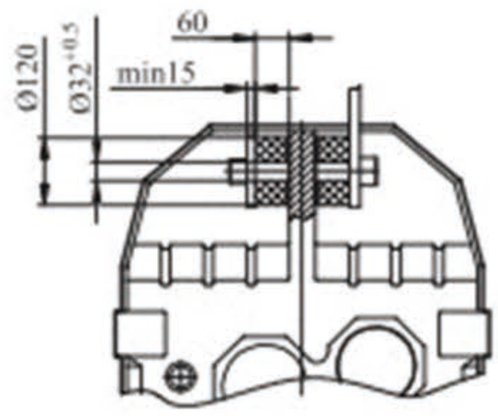

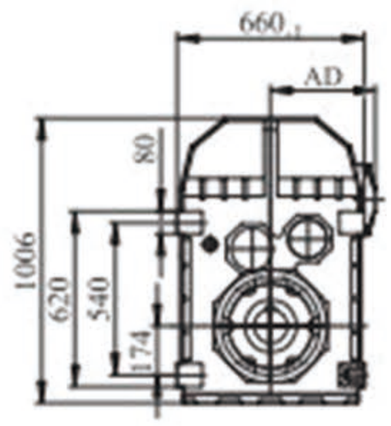

GFA/GFH157

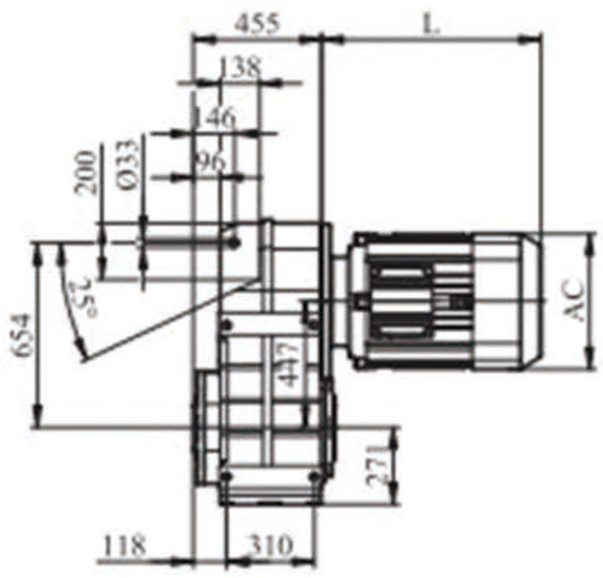

GFAZ/GFHZ157

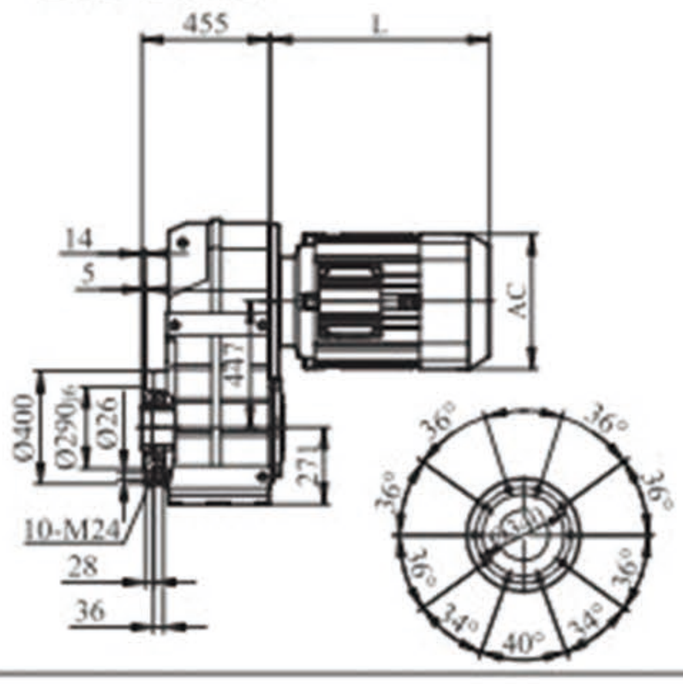

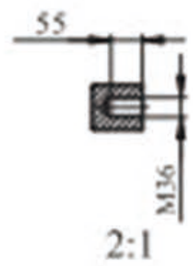

GFF157

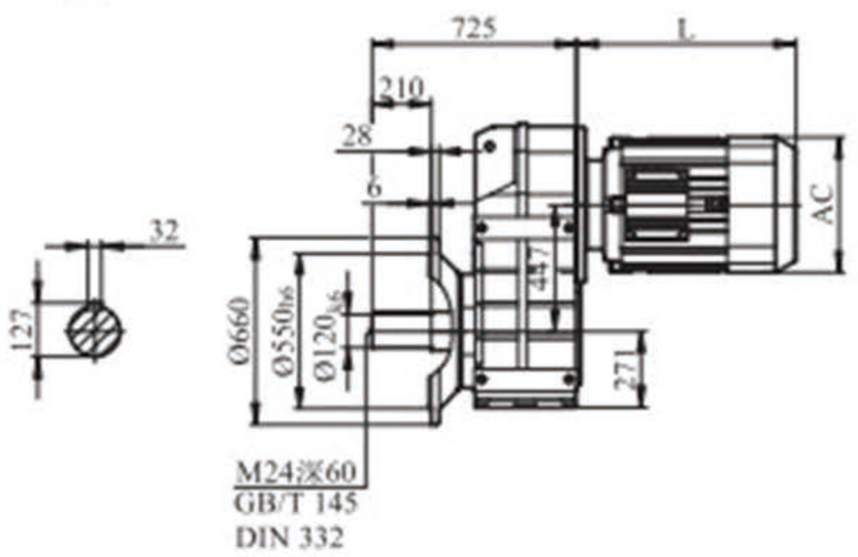

GFAF/GFHF157

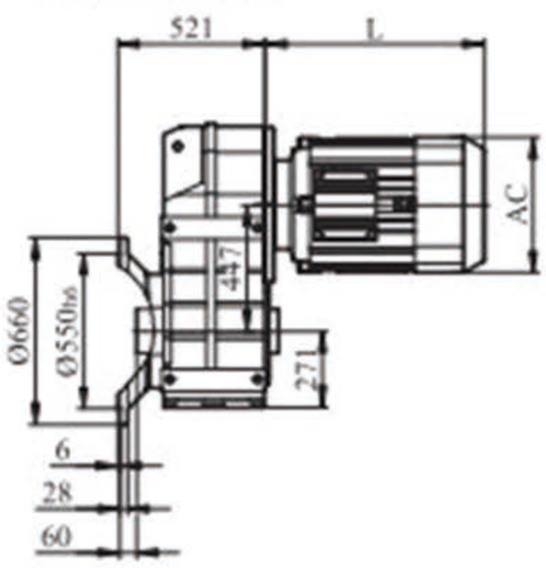

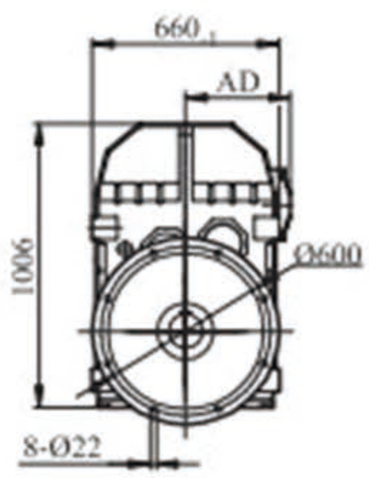

GFA/GFAZ/GFAF157输出轴

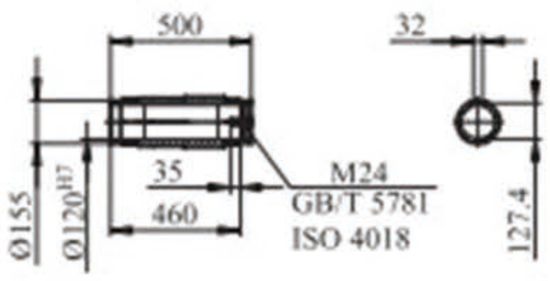

GFH/GFHZ/GFHF157输出轴

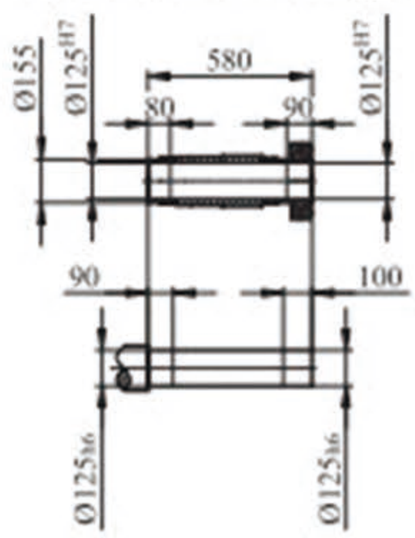

YE2电机机座号 Motor Size	160M	160L	180M	180L	200L	225S	225M	250M	280S	280M	315S	315M	315L
L	567	602	635	666	642	669	691	770	828	879	1100	1210	1210
AC	315	315	350	350	395	450	450	480	530	530	645	645	645
AD	255	255	280	280	305	335	335	370	410	410	530	530	530